ISSN (Online) 2394-6849

International Journal of Engineering Research in Electronics and Communication Engineering (IJERECE)
Vol 4, Issue 6, June 2017

Robotic Four Wheeler for Health Monitoring

[1] Sreekanth B, [2] Meesala Puneeth, [3] Divya A T, [4] Savitha J S, [5] Pavithra R
Department of Electronics and Communication Engineering, R R Institute of Technology, Chikkabanavara, Bengaluru-560090

***Abstract*— Now-a-day, a concept of smart cities is arising more, and developments towards it are going on. The concept of smart cities is to provide smart and essential services to all the people, distributing equally for both rural and urban areas. Smart cities essentially require the technologies that can provide smart service in various aspects. Robotic systems are one of the key solutions for such requirements. The main concern of our paper is towards Medical Service. Time is a critical issue when dealing with people who experience sudden accidents, cardiac arrest, asthma, and many such health issues. The First Aid is a necessary option at that moment of time. Using GPS & GSM based tracker is used to send details to the hospital or doctor using GSM Technology. We can find out the location of the ambulance. Hence, we have designed and developed the robotic ambulance, which brings along a First Aid Kit in a sudden event of health care and facilitates various modes of operation from manual to autonomous functioning to save someone's lives in smart cities.**

***Index Terms*— Smart healthcare, smart cities, emergency management, robotics.**

I. INTRODUCTION

Robots have become a subject of great interest nowadays. It can be seen with many of today's occupations have been replaced by automation. Increasing population density in urban environments demands adequate provision of services and infrastructure. This explosion in city population will present major challenges including air pollution, traffic congestion, health concerns, energy and waste management [2]. As an emerging platform for that domain, a mobile robot can be employed in order to facilitate the health care operation as a smart operating vehicle in smart cities [3]. In the case of health emergency situation, it is common to call the emergency hotline to seek for assistance which often the ambulance will be dispatched to the scene in average of ten minutes time [8]. In practice, the advent time of ambulance is far above the ten minutes standard. This is owing to many obstructions during the process of dispatching an Ambulance. Substantially different factors prevail in this issue ranging from traffic congestion, difficulty to locate the address, long distance, and so forth. Any one of these delays can lead to increase response time. In order to tackle these problems, we have designed and developed a Four Wheeler Robot, which can place a small package containing a First Aid Kit to save lives of victim in emergency case.

A Four Wheeler Robot would be able to travel throughout the environment and can put their position wherever its condition. Robot is an autonomous or Semi autonomous machine that capable to move around in their environment and also can perform various tasks either with direct or partial control by human supervision or completely autonomous [4]. With using multiple sensors for navigation, this robot is able to navigate from a point to a given destination without losing the correct path or hitting obstacles. There are various sensor types used for autonomous navigation in mobile such as vision and range sensors. Mobile robots are mostly used to investigate hazardous and dangerous environments where the risks for human operation exist. This robot can also be used to interact with human such as take care the elderly and doing household chores [5]. In future smart cities [6], Four Wheeler Robots can take over some tedious and time- consuming tasks.

Most rescuers occur shortly after the event of a calamity happens. In that event, human rescuers will organize the rescue planning to get out to the calamity areas, find the victims, and help them as fast as possible. They have very short time to find the victims in any calamity situation. Otherwise the likelihood of finding the victims still alive is nearly zero. In such a critical situation, technology can be used to support rescuers in different tasks. Four Wheeler Robotic systems are increasingly being used in many different ways to find and save the victims in a faster and more efficient way. Whenever a person finds sick or collapses suddenly due to some sudden calamities such as cardiac arrest, he should be treated with in some short span of time. In such cases, this technology offers more possibility in saving a victim. Four Wheeler Robot can be called by using a single app from mobile. The victim in the initial stage or the people around the victim can open that app and can send message to the robot, while robot searches for the location and arrives to that location. Similarly the people who are calling the robot can also indicate the type of calamities in the app itself,

so that the robot would be able to identify to carry the similar tools for the corresponding treatment.

II. LITERATURE SURVEY

In the process of providing better services to all citizens and improving the efficiency of administration processes, the concept of a smart city has been lauded as a promising solution for the coming challenge of global urbanization. The main challenges for the healthcare domain of smart cities are using ICT and remote assistance to prevent and diagnose diseases, and deliver the healthcare service in addition to providing all citizens with access to an efficient healthcare system characterized by adequate facilities and services. The Internet of Things revolution is redesigning modern healthcare with promising technological, economic, and social prospects. Hence it is required to develop new smart technologies to provide advanced healthcare service to the citizens of smart cities and in this paper we aim to present one of feasible solutions for the critical problems of modern cities.

III. BLOCK DIAGRAM OF THE SYSTEM

The Block diagram is shown in figure 1. The proposed system consist of components like Renesas 64 pin microcontroller, Temperature and Heart rate sensors, L293 Driver, Voltage Divider Circuit, DC motor, 4 Wheel Robot, LCD, GSM, Solar Panel and power supply. The 64 pin Renesas microcontroller is connected with Temperature and Heart rate sensors along with a LCD for user interface. The Driver unit is connected to controller to drive the DC motor which is connected in 4 Wheel Robot. Voltage Divider Circuit is used to turn a large voltage into a smaller one. When the robot is called using the android app, the emergency message will be sent to the through GSM module. The solar Panels are used to give natural power to all the components in the system.

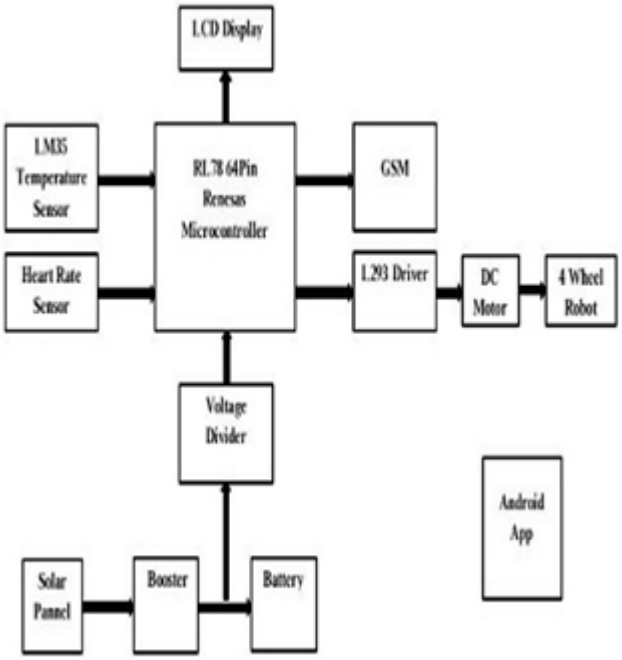

FIGURE 1. THE BLOCK DIAGRAM OF THE SYSTEM.

The LCD displays the latitude and longitude of the location. It also displays the action of robot and the number of concerned person.

IV. HARDWARE USED

The Circuit Diagram of the system Consists of:

- Renesas microcontroller unit
- LCD
- GSM
- Heart rate sensor
- Temperature sensor
- L293 driver circuit
- DC Motor

4 wheel robot and Solar power, battery

A. RENESAS MICROCONTROLLER

Renesas provides a useful platform for evaluating the Renesas suite of development tools for coding and debugging, using high performance embedded workshop as well as programming the device using EI emulator and/or flash development tool kit. It has 16 bit architecture, 64 pin product. The proposed system uses R5F100LE family.

ISSN (Online) 2394-6849

International Journal of Engineering Research in Electronics and CommunicationEngineering (IJERECE)
Vol 4, Issue 6, June 2017

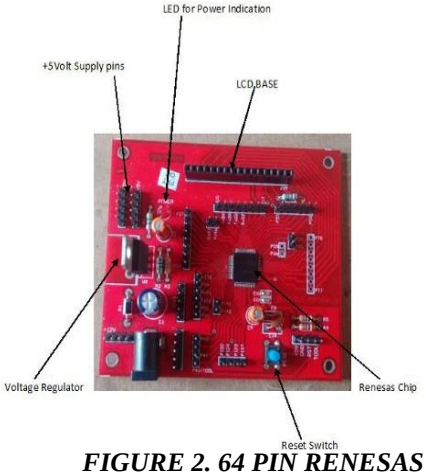

FIGURE 2. 64 PIN RENESAS MICROCONTROLLER BOARD.

It consist of General-purpose register of 8 bits × 32 registers (8 bits × 8 registers × 4 banks). ROM of 512 KB and RAM of 32 KB, Data flash memory of 8 KB. It has On-chip high- speed on-chip oscillator, On-chip single-power-supply flash memory (with prohibition of block erase/writing function), On-chip debug function, On-chip power-on-reset (POR) circuit and voltage detector (LVD), On-chip watchdog timer (operable with the dedicated low-speed on-chip oscillator).

Different potential interface Can connect to a 1.8/2.5/3 V device. 8/10-bit resolution A/D converter (VDD = EVDD =1.6 to 5.5 V) from 6 to 26 channels. It limits Power supply voltage VDD 1.6 to 5.5 V. Totally 11 ports with 58 Input/Output Pins. We use renesas microcontroller because they are fast, highly reliable, low in cost and deliver eco- friendly performance. The renesas microcontroller board is shown in figure 2.

B. ALPHA-NUMERIC LCD DISPLAY

A liquid crystal display (LCD) is a flat panel display based on Liquid Crystal Technology. A liquid crystal display consists of an array of tiny segments (called pixels) that can be manipulated to present information. Liquid crystals do not emit light directly instead they use light modulating techniques. LCDs are used in a wide range of applications, including computer monitors, television, instrument panels, aircraft cockpit displays, signage, etc. They are common in consumer devices such as video players, gaming devices, clocks, watches, calculators, and telephones. It is an electronically modulated optical device made up of any number of segments filled with liquid crystals and arrayed in front of a light source (backlight) or reflector to produce images in color or monochrome. JHD162A is one such LCD which is used here. It has a Panel with 2 rows and 16 columns and with blocks as shown with 5x8 pixel-selection pattern. Figure3 shows the block diagram of JHD162ALCD.

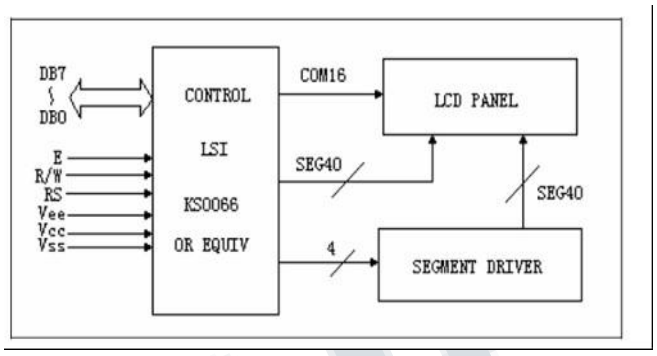

FIGURE 3. BLOCK DIAGRAM OF JHD162A LCD.

Figure 4 shows the general circuit and settings of JHD162A. Alpha Numeric displays form an integral part of the Embedded Systems. The Data displayed here is controlled by the Microcontroller. The Control pins like Read Strobe, Read/Write and Enable are controlled through the Microcontroller Ports. The 8 data is also provided through a Microcontroller Port.

FIGURE 4. GENERAL CIRCUIT AND SETTINGS OF JHD162A.

C. GSM

GSM stands for Global System for Mobile Communications. This is a standard set developed by the European Telecommunications Standards Institute (ETSI) to describe technologies for second generation (or "2G") digital cellular networks. The GSM standard initially was used originally to describe switched circuit network for full duplex voice telephony to replace first generation analog cellular networks. The GSM standard is succeeded by the third generation (or "3G") UMTS standard developed by the 3GPP. GSM networks will evolve further as they begin to incorporate fourth generation (or "4G") LTE Advanced standards. "GSM" is a trademark owned by the GSM Association. Figure 5 shows the GSM schematic diagram.

ISSN (Online) 2394-6849

International Journal of Engineering Research in Electronics and CommunicationEngineering (IJERECE)
Vol 4, Issue 6, June 2017

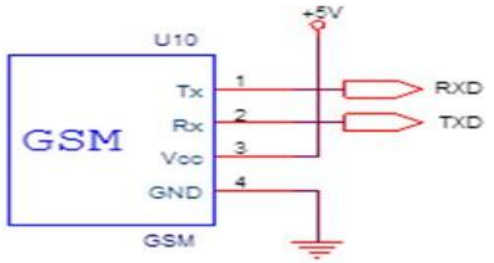

FIGURE 5. GSM SCHEMATIC DIAGRAM.

GSM networks operate in a number of different carrier frequency ranges (separated into GSM frequency ranges for 2G and UMTS frequency bands for 3G), with most 2G GSM networks operating in the 900 MHz or 1800 MHz bands. Where these bands were already allocated, the 850 MHz and 1900 MHz bands were used instead (for example in Canada and the United States). In rare cases the 400 and 450 MHz frequency bands are assigned in some countries because they were previously used for first-generation systems. One of the key features of GSM is the Subscriber Identity Module, commonly known as a SIM card. The SIM is a detachable smart card containing the user's subscription information and phone book. This allows the user to retain his or her information after switching handsets. We are be using SIM900 GSM Module in our Project. SIM900 is a Tri- band GSM/GPRS engine that works on frequencies EGSM 900 MHz, DCS 1800 MHz and PCS 1900 MHz AT (Attention) Commands are used to get the information in SIM card. The "AT" or "at" prefix must be set at the beginning of each command line. The figure 6 shows the front and back look of GSM module.

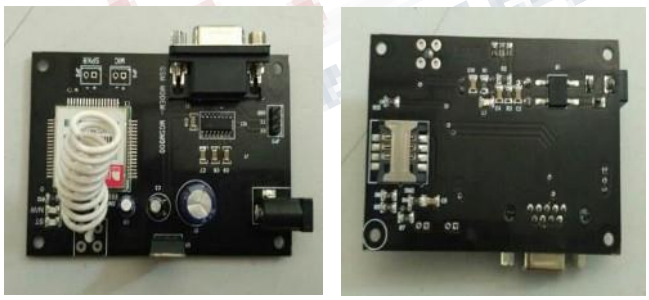

FIGURE 6. FRONT AND BACK LOOK OF GSM MODULE

D. HEART RATE SENSOR

precise inherent calibration make interfacing to readout or control circuitry especially easy. It can be used with single The Heart Rate Sensor provides a simple way to study the heart's function. This sensor monitors the flow of blood through Finger. As the heart forces blood through the blood vessels in the Finger, the amount of blood in the Finger changes with time. The figure 7 shows the heart rate sensor. The sensor shines a light lobe (small High Bright LED) through the ear and measures the light that is transmitted to LDR. The signal is amplified, inverted and filtered, in the Circuit. By graphing this signal, the heart rate can be determined. Usually Heart rate will be calculated for 1Minute. For a healthy human being we get heart rate of 72 pulse rate per 1 minute. For real time applications we cannot wait for 1minute each time. In this we are calculating heart rate for each 5 seconds. The circuit diagram of heart rate sensor is shown in figure 8.

FIGURE 7. HEART RATE SENSOR.

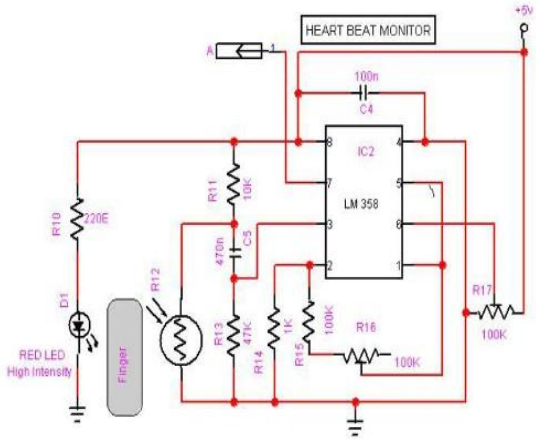

FIGURE 8. CIRCUIT DIAGRAM OF HEART RATE SENSOR.

E. TEMPARATURE SENSOR

The LM35 series are precision integrated-circuit temperature sensors, whose output voltage is linearly proportional to the Celsius (Centigrade) temperature. The LM35 does not require any external calibration or trimming to provide typical accuracies of ±1⁄4˚C at room temperature and ±3⁄4˚C over a full −55 to +150˚C temperature range. Low cost is assured by trimming and calibration at the wafer level. The LM35's low output impedance, linear output, and power supplies,

International Journal of Engineering Research in Electronics and CommunicationEngineering (IJERECE)
Vol 4, Issue 6, June 2017

or with plus and minus supplies. It draws only 60 µA from its supply, it has very low self-heating, less than 0.1˚C in still air. The LM35 is rated to operate over a −55˚ to +150˚C temperature range. Figure 9 shows the pin diagram of LM35 temperature sensor.

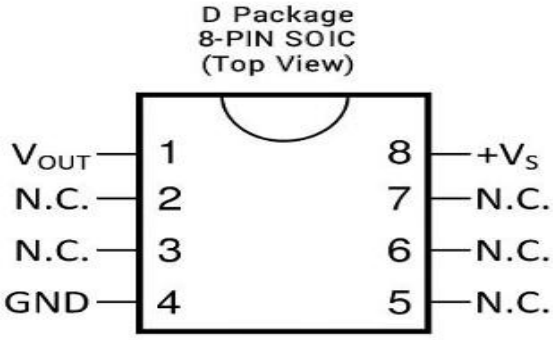

FIGURE 9. PIN DIAGRAM OF LM35 TEMPARATURE SENSOR.

F. L293 MOTOR DRIVER

The L293 is an integrated circuit motor driver that can be used for simultaneous, bidirectional control of two small motors. The L293 is limited to 600 mA. The L293 comes in a standard 16-pin, dual-in line integrated circuit package. Pin diagram of L293 Driver is given below in figure 10.

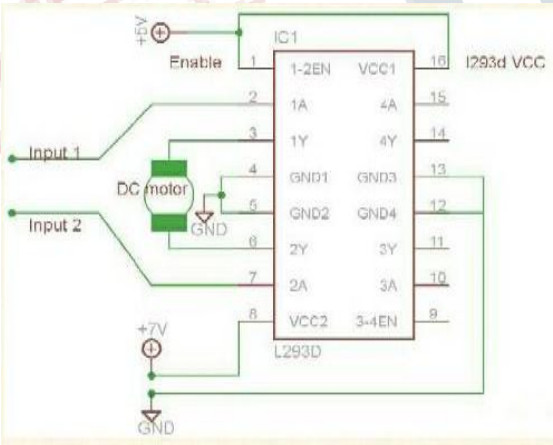

FIGURE 10. PIN DIAGRAM OF L293 DRIVER

G. DC MOTOR

NR-DC-ECO is high quality low cost DC geared motor. It contains Brass gears and steel pinions to ensure longer life and better wear and tear properties. The gears are fixed on hardened steel spindles polished to a mirror finish. These spindles rotate between bronze plates which ensures silent running. The output shaft rotates in a sintered bushing. The whole assembly is covered with a plastic ring. All the bearings are permanently lubricated and therefore require no maintenance. The motor is screwed to the gear box from inside. The figure 11 shows the DC Geared motor.

FIGURE 11. 12V 100 RMP DC GEARED MOTOR.

H. SOLAR PANEL

A solar panel (also solar module, photovoltaic module or photovoltaic panel) is a packaged, connected assembly of photovoltaic cells. The solar panel can be used as a component of a larger photovoltaic system to generate and supply electricity in commercial and residential applications. A solar cell (also called photovoltaic cell or photoelectric cell) is a solid state electrical device that converts the energy of light directly into electricity by the photovoltaic effect. A solar cell made from a monocrystalline silicon wafer. Solar panels use light energy (photons) from the sun to generate electricity through the photovoltaic effect.

V. SOFTWARE USED

A. CUBE SUITE+

The Cube Suite+ is an integrated development environment provides simplicity, security, and ease of use in developing software through iterative cycles of editing, building and debugging.

FEATURES:

- Project management: Manage project information, including source-file structure, build options, and settings for connecting to the debug tool.

International Journal of Engineering Research in Electronics and CommunicationEngineering (IJERECE)
Vol 4, Issue 6, June 2017

- Design: The pin assignment function makes it possible to output reports called "device pin list" and "device top view" as files, by inputting the pin configuration status of the microcontroller.
- Coding: A tree view of the files included in the project appears in a CS+ panel, and the files can be edited by linking an editor to CS+.
- Build: You can configure optimization and other build options in the CS+ panels, enabling you to create efficient load module files and a library file.
- Debug: You can display your debugging tool's connection settings and debugging information in CS+ panels.
- Analysis: You can analyze information while the program is executing, and display information about the functions and variables.
- Updates: Communicate with the update server to get the latest version of this product.

B. FLASH PROGRAMMER

Flash programmer is a software package used to program the on-chip flash memory of microcontrollers. It provides usability and functionality optimized specifically for flash programming.

VI. DESCRIPTION

It is a four wheeler robot, placed at different position on Roads. If any user or patient faces health issues, he needs to open an Android Application in his smart phone. Open four wheeler robot Application is smart phone. This can be done by any user or patient or surrounding neighbours. Once the application is open, user needs to click the Button. An SMS is sent to the nearest robot with location about the patient. Four wheeler robot reaches the patient location with first aid kit. Four wheeler robot will send alert to the hospital and doctors about the patient. Surrounding people can assist the patient with the first aid kit and by communicating with the doctor. The doctor number will be displayed in the robot. Four wheeler robot will be operated with Solar Panel (Renewable energy). The below figure shows the overview of the system workflow.

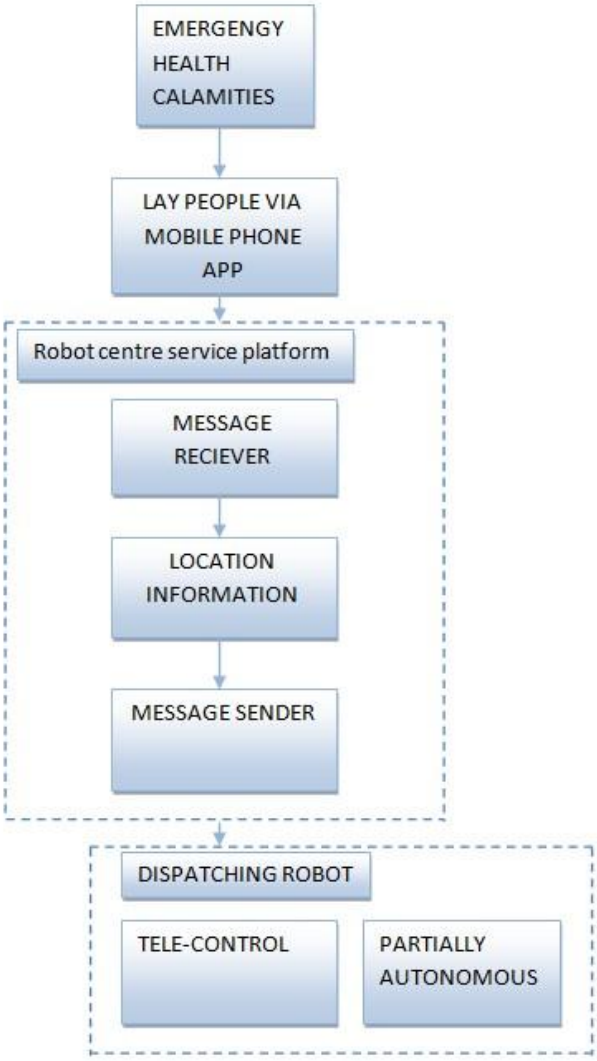

FIGURE 12. OVERVIEW OF SYSTEM WORKFLOW.

VII. EXPECTED RESULTS

Smart cities essentially require the technologies that can provide smart service in various aspects, and robotic systems are one of the key solutions for such requirements. Time is a critical issue when dealing with people who experience a sudden issue in health, that unfortunately could Die due to inaccessibility of the emergency treatment. Therefore, an immediate

treatment must be administered to the victim within a few minutes after collapsing. Hence, we have designed and developed the Four Wheeler robot, which brings along an medical kit in a sudden event of health issue and facilitates various modes of operation from manual to autonomous functioning to save someone's lives in smart cities. It fetches the location and locate it. The below figure shows the result of developed model.

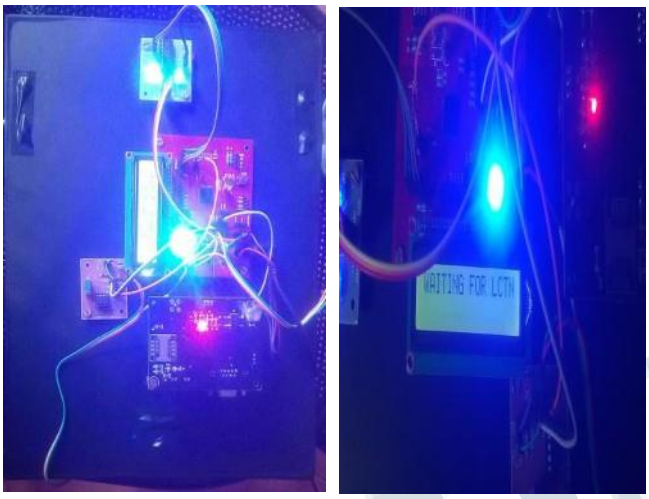

FIGURE 13. RESULT MODEL

VIII. FUTURE SCOPE

In future, this project can be taken to the product level. To make this project as user friendly and durable, we need to make it compact and cost effective. Going further, most of the units can be embedded along with the controller on a single board with change in technology, thereby reducing the size of the system.

IX. ADVANTAGES AND APPLICATIONS

The Advantages of Four Wheeler Robot is as follows:

- It saves time.
- Manual operation has been reduced to major extend.
- Less man power required.
- Efficient distribution system.
- Easy to use.
- Efficient and reliable.

The main Application of Four Wheeler Robot is to save someone lives in sudden emergency and to provide new technology for the development of smart cities.

X. CONCLUSION

The project is designed using structured modeling and is able to provide the desired results. It can be successfully implemented as a Real Time system with certain modifications. Science is discovering or creating major breakthrough in various fields, and hence technology keeps changing from time to time. Going further, most of the units can be fabricated on a single along with microcontroller thus making the system compact thereby making the existing system more effective. To make the system applicable for real time purposes components with greater range needs to be implemented.

REFERENCES

[1] H. Ning et al., ``From Internet to smart world," IEEE Access, vol. 3, pp. 1994_1999, Oct. 2015.

[2] R. Jalali, K. El-khatib, and C. McGregor, ``Smart city architecture for community level services through the Internet of Things," in Proc. IEEE 18th Int. Conf. Intell. Next Generat. Netw. (ICIN), Feb. 2015, pp. 108_113.

[3] M. Arif, H. Samani, C.-Y. Yang, and Y.-Y. Chen, ``Adaptation of mobile robots to intelligent vehicles," in Proc. 4th IEEE Int. Conf. Softw. Eng. Service Sci. (ICSESS), May 2013, pp. 550_553.

[4] Y.-C. Lin, S.-T. Wei, S.-A. Yang, and L.-C. Fu, ``Planning on searching occluded target object with a mobile robot manipulator," in Proc. IEEE Int. Conf. Robot. Autom. (ICRA), May 2015, pp. 3110_3115.

[5] C.-P. Lam, C.-T. Chou, K.-H. Chiang, and L.-C. Fu, ``Human-centered robot navigation_ Towards a harmoniously human_ robot coexisting environment," IEEE Trans. Robot., vol. 27, no. 1, pp. 99_112, Feb. 2011.

[6] T. Yonezawa, I. Matranga, J. A. Galache, H. Maeomichi, L. Gurgen, and T. Shibuya, ``A citizen-centric approach towards global-scale smart city platform," in Proc. Int. Conf. Recent Adv. Internet Things (RIoT), 2015, pp. 1_6.

[7] K. Nagatani et al., ``Redesign of rescue mobile robot Quince," in Proc. IEEE Int. Symp. Safety, Secur., Rescue Robot. (SSRR), Nov. 2011, pp. 13_18.

[8] E. Liu and E. Wong, ``Emergency ambulance services," Central Government Offices, Hong Kong, Tech. Rep. RP15/95-96, 1996.

[9] H. A. Samani, J. T. K. V. Koh, E. Saadatian, and D. Polydorou, ``Towards robotics leadership: An analysis of leadership characteristics and the roles robots will inherit in future human society," in Intelligent

Information and Database Systems. Berlin, Germany: Springer, 2012, pp. 158_165.

[10] T. Nam and T. A. Pardo, ``Conceptualizing smart city with dimensions of technology, people, and institutions," in Proc. 12th Annu. Int. Digital Government Res. Conf., Digit. Government Innov. Challenging Times, 2011, pp. 282_291