ISSN (Online) 2394-6849

International Journal of Engineering Research in Electronics and Communication Engineering (IJERECE)
Vol 4, Issue 5, May 2017

E-PASS Sensing and Ticketing

[1] Pavana M, [2] Poojalakshmi S, [3] Prathibha R, [4] Preethi L
[1] Under guidance of the Prof Savitha H S
Department of Electronics and Communication

Abstract: **The objective of this paper is to issue tickets in public transport system using a smart card. In general, Every Bus has a conductor who will collect money and issues ticket to each passenger. It will take a lot of time as well as create manual error. To overcome this problem, a new system is proposed. In this proposed system, IR sensor is used to count the number of persons entering into the bus. Smart card used here is an RFID which is rechargeable. It contains the information such as name, mobile number and address. The RFID reader will read the information in the RFID Tag. A message is send to the concerned persons mobile. The user must enter the destination. The corresponding amount will be deducted from the smart card. The microcontroller used here is P89V51RD2.**

***Keyword*-GPS, GSM, P89V51RD2, RFID**

I. INTRODUCTION

The Public transport system is a major source of income in developing countries like India. But, this public transport system faces several problems. The conductor will face various problems in issuing the tickets. But, this new system will provide the tickets automatically and deduct the fare for the distance travelled from the passenger's account. It is also used for passenger's identification.

RFID has been an emerging technology in recent years. RFID consists of two components, RFID Tag and RFID Reader. RFID Tag contains informations such as name, address and mobile number .RFID reader reads the above informations from the RFID Tag.IR sensor is used to count the number of persons entering into the bus. The location of the bus can be identified by GPS. The information to the checker and the ticketing information to the user is transmitted using GSM.

II. EXISING SYSTEM

A. A. Nunes et al(2016) described a methodology for estimating the destination of passenger journeys from automated fare collection (AFC) system data. It proposes new spatial validation features to increase the accuracy of Destination inference results and to verify key assumptions Present in previous origin-destination estimation literature. The methodology applies to entry-only system configurations combined with distance-based fare structures, and it aims to enhance raw AFC system data with the destination of individual journeys. This paper describes an algorithm developed to implement the methodology and the results from its application to bus service data from Porto. The data relate to an AFC system integrated with an automatic vehicle location system that records a transaction for each passenger boarding a bus, containing attributes regarding the route, the vehicle, and the travel card used, along with the time and the location where the journey began. Some of these are recorded for the purpose of allowing on board ticket inspection but additionally enable innovative spatial validation features introduced by the methodology. The results led to the conclusion that the methodology is effective for estimating journey destinations at the disaggregate level and identifies false positives reliably.
K.Seibenhandl et al(2013) described Self-service ticket vending machines (TVMs) have become an increasingly important distribution channel in the public transport sector, progressively replacing the traditional ticket counter. In a public transport setting, where ticket counter closures have left different groups of people dependent on TVM to meet their mobility needs, a single, effective system is required. A prototype for a novel generation of TVM was developed in three phases: First, the context of use was analyzed. In the second phase, A requirements analysis was conducted. Third, different hardware and software interaction designs were iteratively tested and evaluated. The resulting prototype met the - Requirements of most user groups, though further adjustments are necessary. Conclusions: The UCD approach proved to be a valuable framework for the development and design of self-service systems.
F.Araujo et al(2014) discussed the challenge of creating an electronic ticketing system for transportation systems that can partially or completely run on the cloud. This challenge is defined within the scope of an industrial project. The resulting system should be able to reach a large spectrum of customers and should provide two key advantages: lower operational costs, especially for small clients without IT departments, and faster execution of queries for monthly or other sorts of analysis, using the elasticity of cloud-based resources. To fulfill the goals of the project, a system was proposed with very standard technologies and procedures: a three-tiered

ISSN (Online) 2394-6849

International Journal of Engineering Research in Electronics and Communication Engineering (IJERECE)
Vol 4, Issue 5, May 2017

architecture; a separation of the online and analysis databases; and an Enterprise Service Bus to get the input from very diverse hardware and software stacks. In this paper several options regarding the location of these facilities on the cloud discussed and evaluate the costs involved was evaluated. While this work already defines many features of the system, it must be considered as preliminary, as some open details remain for future work.

III. PROPOSED SYSTEM

In the general way, every bus is controlled by a conductor. The conductor will collect money from each passenger and issue ticket. Initially ,printed papers or
Tokens are used as tickets. For example, if a passenger wish to travel in bus, he has to carry money with him. Then conductor will collect the money and issue the ticket. This will take more time and waste of human resource, paper as well as energy.
Nowadays, handheld machines are used to print tickets. This system has many disadvantages. The passenger have to carry the ticket till the end of travel and more amount of paper is needed to print the ticket.Even handheld ticketing machine is comparatively slow and
In this paper, we have proposed a smart ticketing system using RFID which is a user friendly system for public.RFID consists of a RFID Tag and RFID reader.Each user will be provided with a smart card which is rechargeable.It may be a prepaid or postpaid one.The RFID reader reads the information of the user such as name, address and mobile number.IR sensor helps to count the number of persons entering into the bus. After taking the tickets the count in the IR sensor will be deducted. If a count is not deducted within five minutes ,then it is taken into account as fraud information. we can obtain the tickets from our Android mobile phones. Now a days, Android mobile phones plays a major role in the society. The consumer's application and usage of mobile phones have expanded tremendously.

After reading the information from the RFID Tag, a notification will arrive at the user's mobile phone. An application which has been developed in the Android mobile helps the user to take the tickets according to their desire.

The source will be set in the mobile application through GPS information. The user must enter the destination point and the travelling charge will be deducted from the user's rechargeable card. If any passenger fail to take the ticket, a message will be send to the nearby station checker's mobile number through GSM. So, this system is much more useful to avoid the misusages. In addition to this, a vibration sensor is connected to the system which is useful for detecting the accidents .In case of any accidents , the accident spot is detected by the GPS and the location's name will send to the nearby stations.

A. Software required

1. Kiel
2. Flash magic

B. Block Diagram

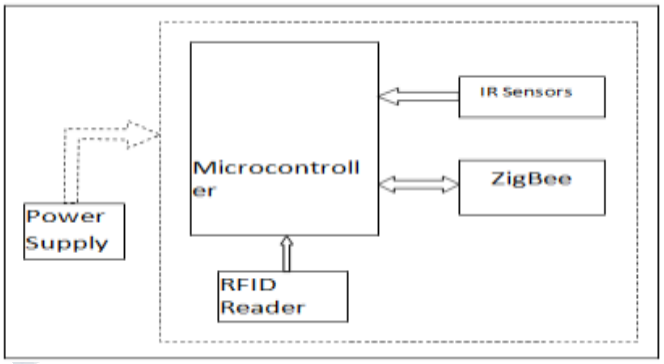

Fig 01: Handheld/Ticketing System

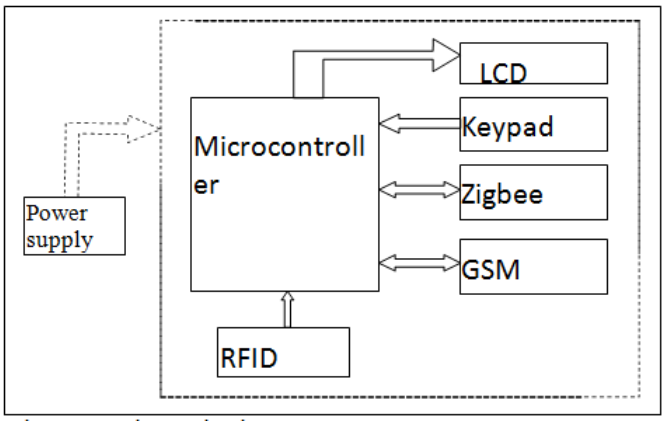

Fig 02: Device at the door

ISSN (Online) 2394-6849

International Journal of Engineering Research in Electronics and Communication Engineering (IJERECE)
Vol 4, Issue 5, May 2017

C. Hardware required

1. PIC Microcontroller(P89V51RD2)
2. GSM
3. IR Sensor
4. RFID System
5. LCD Display
6. Keypad
7. Zigbee

D. PIC MICROCONTROLLER

Peripheral Interface is a family of microcontroller developed by Hardvard Micro technology. Because of high speed execution, PIC microcontroller has chosen. RISC architecture is used.PIC has 32k ROM,48 bit timers,5 I/O port.16 bits and 32 bits PIC are available.

E. GSM

A GSM modem is a wireless modem that works with a GSM wireless network. A wireless modem behaves like a dial-up modem. The main difference between them is that a dial-up modem sends and receives data through a fixed telephone line while a wireless modem sends and receives data through radio waves.

A GSM modem can be an external device or a PC Card / PCMCIA Card. Typically, an external GSM modem is connected to a computer through a serial cable or a USB cable. A GSM modem in the form of a PC Card / PCMCIA Card is designed for use with a laptop computer. It should be inserted into one of the PC Card / PCMCIA Card slots of a laptop computer. Like a GSM mobile phone, a GSM modem requires a SIM card from a wireless carrier in order to operate.

GSM networks operate in a number of different frequency ranges. Most 2G GSM networks operate in 900MHZ or 1800MHZ bands.GSM-900 uses 890-915 MHZ to send information from the mobile station and 935-960MHZ for the other direction.

G. IR SENSOR

An Infrared sensor is an electronic measurement which is used to sense certain characteristics of its surroundings by either emitting/detecting infrared radiation. Human detector is also an infrared sensor. When passenger crosses the IR sensor, the rays will be interrupted

H. RFID SYSTEM

An RFID tag is a microchip combined with an antenna in a compact package; the packaging is structured to allow the RFID tag to be attached to an object to be tracked. "RFID" stands for Radio Frequency Identification. The tag's antenna picks up signals from an RFID reader or scanner and then returns the signal, usually with some additional data (like a unique serial number or other customized information). A passive tag is an RFID tag that does not contain a battery; the power is supplied by the reader. When radio waves from the reader are encountered by a passive RFID tag, the coiled antenna within the tag forms a magnetic field. The tag draws power from it, energizing the circuits in the tag. The tag then sends the information encoded in the tag's memory.

I. LIQUID CRYSTAL DISPLAY(LCD)

Liquid crystal cell displays (LCDs) are used in similar applications where LEDs are used. These applications are display of display of numeric and alphanumeric characters in dot matrix and segmental displays.

J. Keypad(4X4):

A keypad is a set of buttons arranged in a block or "pad" which usually bear digits, symbols and usually a complete set of alphabetical letters. If it mostly contains numbers then it can also be called a numeric keypad. Keypads are found on many alphanumeric keyboards and on other devices such as calculators, push-button telephones, combination locks, and digital door locks, which require mainly numeric input.

K. ZigBee:

CC2500RF Module is a transreceiver module which provides as to use RF communication at 2.4 Ghz. It can be used to transmit and receive data at 9600 baud rates from any standard CMOS/TTL source. This module is a direct line in replacement for your serial communication it requires no extra hardware and no extra coding to It works in Half Duplex mode i.e. it provides communication in both directions, but only one direction at same time

IV. RESULT

Fig 03 : Device at the door

Fig 04 : Handheld device by the conductor

V. CONCLUSION

This project may rectify many disadvantage in ticket collecting system and the implementation of sending accident information automatically to the nearest stations may save many life. Fare is debited from the recharged amount. Cash is no longer necessary, contactless smart cards can be loaded with large amounts of money, passengers no longer need to carry the correct change will make the passenger feel comfortable to travel with the user friendly system

.

REFERENCES

[1]. www.google.com
[2]. www.wikipedia.com
[3]. International journal of Engineering and Technology (IJET) Volume 5 No 3 Jun-Jul 2013
[4]. International Journal of Research and Engineering Volume 3, issue 3
[5]. IJISET –International Journal of Innovative Science, Engineering & Technology Volume 2, Issue 9, September 2015