ISSN (Online) 2394-6849

International Journal of Engineering Research in Electronics and Communication Engineering (IJERECE)
Vol 4, Issue 5, May 2017

Design and Development of Low cost Real Time Data Logger Based on Embedded Linux

[1] Dr. R. Lakshmi Narayana, [2], Prof. K. Nagabhushan Raju
[1] Post-Doctoral Fellow,[2] Professor
Dept. of Instrumentation,
Sri Krishnadevaraya University, A.P. India

Abstract: **BeagleBone electronic instrument power status reports generation system, based an inexpensive ARM Cortex processor board, which hosts its own web server to display and store data on database. A development platform that utilizes the low cost TI Sitara AM3358 ARM Cortex-A8 processor and runs an Debian operating system. An external real-time clock provides time and date-stamping for each captured quantity. The BeagleBone black captures the event from different equipments or electronic devices which ever going to monitor the status. The proposed system detects events when events happen, states how long between events, and counts how many events.**

***Index Terms*— BeagleBone Black, RTC, Python, PHP, MySQ**

I. INTRODUCTION

The embedded industry has hardly evolved using the few past years. The embedded web server provides services with minimum computing resources. The 8-bit microcontroller is the most important device for an embedded system industry but now more and more devices are not only gaining popularity but these getting smart enough to be able to connect them to a network to monitor and control [1]. The embedded web server should be relatively small in size and easily integrated with many devices and BeagleBone black is fit for that. Integrating web and embedded technology for electronic equipment, data logger system based on web management is required. Remote access and monitor the onsite devices through Ethernet network using web browser without limitations of the region and time to obtain the real time status information. This type of embedded web server has many advantages, such as low power consumption, small size, low cost and flexible design. The architecture of the whole system is shown in **Figure 1**. It is an effective way of leading internet into Linux based embedded system. The implementation of embedded networking is achieved by means of embedded web server [3]. The microprocessor designed by ARM architecture is of high performance, low cost and low power. It has been widely used to design embedded system and is most popular 32-bit microprocessor. At the same time, along with the rapid development of internet technology, the internet based data logger is becoming increasingly common and the electronic system is in trend that changing from field of system status monitor to the remote internet data logger. The client can freely check the status of the particular electronic devices and the browser can be used directly without installing additional client software [4].

This paper introduces a solution for embedded Linux based system access through internet to monitor, maintain and to reduce the system cost. It is possible to develop cross-platform transplantation of Linux operating system, which provides a convenient, fast and simple method for embedded Linux systems [5].

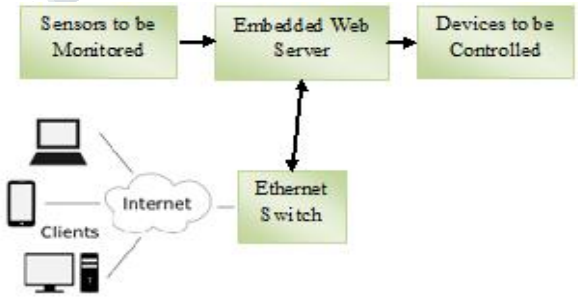

Figure 1. RT-EDL system architecture

The era of web server comes from the need of client trying to access data which is made through HTTP (HyperText Transfer Protocol) so that the server can process, store and send the data on the requested client. Although the most important role of web servers is to provide data, it can also in some instances accept data from the clients. The traditional methods [2] to make use of UNIX and Linux workstations, typically requiring, large database storage systems occupying large area and high setup cost.

ISSN (Online) 2394-6849

International Journal of Engineering Research in Electronics and Communication Engineering (IJERECE)
Vol 4, Issue 5, May 2017

II. HARDWARE DESIGN

The RT-EDL (Real Time-Event Data Logger) mainly consists of TI Sitara AM3358 ARM Cortex-A8 processor, external real time clock, and AC-DC converter. The BeagleBone Black is a low-cost credit-card-sized development platform with an AM3358 processor, onboard micro HDMI port, 512MB of DDR3L DRAM, 4GB onboard flash memory at 1 GHz speed. It is still perfect for physical computing and smaller embedded applications. Figure 2 is the block diagram of hardware system, which includes Real Time Clock, Ethernet, Power converter input and USB port for data storage.

GPIO3.19 pin is used to shutdown the microcomputer safely by manually through a push button and GPIO0_7 pin is used as an interrupt to capture the status of the instrument power. The proposed system had data backup provision using traditional memory stick. The power supply of the microcomputer provides 5 volts and 2 Amps power. It has one ethernet port to communicate internet/intranet via ethernet switch; through network we connect smart phones, any web browser tablets etc.

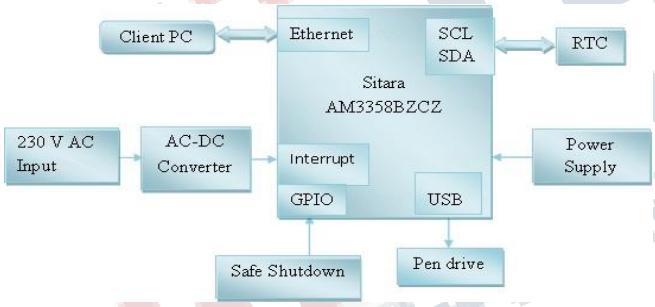

Figure 2. RT-EDL block diagram

The Serial Real-Time Clock DS1307 is a low-power; full binary-coded decimal (BCD) clock/calendar plus 56 bytes of NV SRAM. Address and data are transferred serially via a 2-wire, bi-directional bus. The clock/calendar provides seconds, minutes, hours, day, date, month, and year information [6]. A battery-backed RTC is not included with the BBB. Instead, the BBB is intended to be connected to the Internet via Ethernet or Wi-Fi, updating the time automatically from the global network time protocol (NTP) servers. But the proposed system could not be connected to internet always, so it is interfaced to RTC externally through I2C [7]. The Interfacing of RTC with ARM processor is shown in Figure 3.

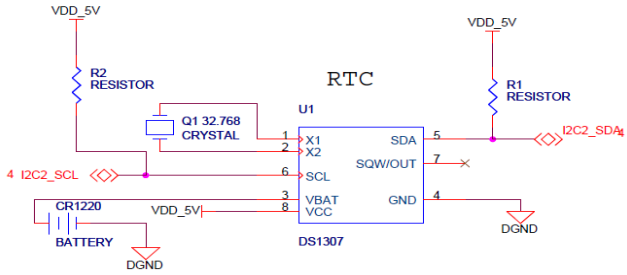

Figure 3. Interfacing of RTC with ARM processor

In the experimental setup, power generator is used produce 230 volts AC, which is converted into 3.3 volts DC with the help of a step down transformer, bridge rectifier, LM317H voltage regulator and passive components as shown in Figure 4. The ARM processor requires an operating voltage is 3.3 volts. The AC to DC convertor has designed to do conversion job. The other components used are step-down transformer, bridge rectifier, electro-light capacitors, resistors and LM317 adjustable regulator. The bleeder resistor is used to avoid suppressing the sudden peak input pulse as shown in Figure 5.

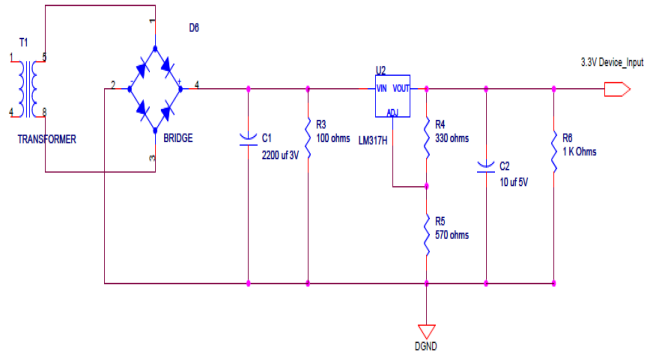

Figure 4. Circuit diagram of AC-DC converter

Figure 5. Block diagram of AC-DC converter

ISSN (Online) 2394-6849

International Journal of Engineering Research in Electronics and Communication Engineering (IJERECE)
Vol 4, Issue 5, May 2017

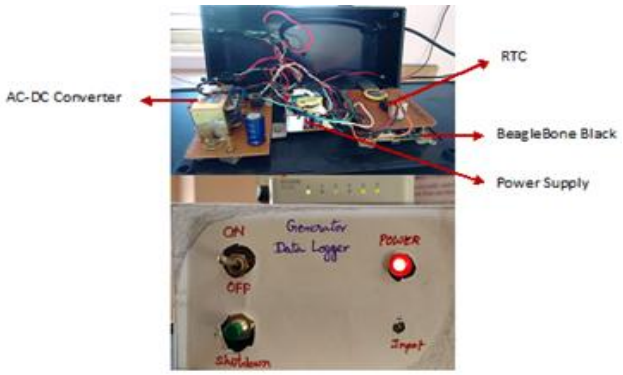

Figure 6. RT-EDL hardware

III. SOFTWARE DESIGN

The website is implemented using HTML, PHP and MySQL. Hyper Text Markup Language [8] is the building block for web pages. Web browser is used to interpret and display information on the computer screen. An HTML file is a text file containing small markup tags to tell the web browser how to display the page. Hypertext Preprocessor (PHP) is a programming language [9] that allows creating the dynamic content that interacts with databases. PHP is a server side scripting language that is embedded in HTML. PHP is basically used for developing web-based real time event data logger. MySQL tool is used to store the information in database table and send it to a web page. The MySQL database management system has become most popular in recent years especially in the Linux and open source communities. It is well liked for several reasons; it is fast, and it's easy to set up, use, and administer. MySQL runs under many varieties of UNIX and Windows, and MySQL based applications can be written in many languages [10].

The main system software is written in C++ to connect database and capture interrupt status from instrument and store instrument on/off status, name, status, and ID in to database. Writing C++ application to do file monitoring, to simplify the code a little bit using the library glib2 to make the code simpler and paves the way for graphical application to get input from the custom hardware.

The software flow diagram of the system is shown in Figure 6. Web based report generation software flow diagram is shown in Figure 7 developed with the help of HTML, PHP and MySQL. The interrupt driven GPIO system class is exported using bash shell script. The microcomputer safe shutdown button logic is written in python scripting.

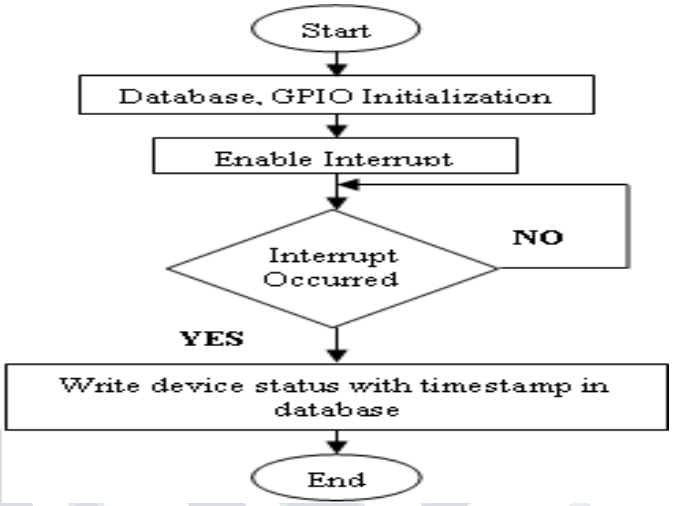

Figure 7. Main system logic flow

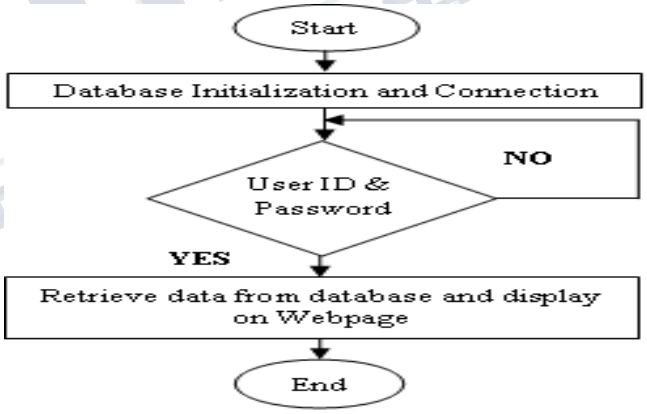

Figure 8. Reports generation logic flow

IV. EXPERIMENTAL RESULTS

An embedded Linux based real-time event data logger system was tested and the results are obtained on the browser for recording the electronic device or equipment on/off condition, and also store the ON/OFF timestamp on database. The system provides accurate and timely information relating to equipment status. The use of the web interface through internet as a communication medium was chosen because of

ISSN (Online) 2394-6849

International Journal of Engineering Research in Electronics and Communication Engineering (IJERECE)
Vol 4, Issue 5, May 2017

its universal mode, but it should be noted that cyber security challenges still exist. In future the proposed technology can be extended using wireless technologies. Beaglebone Black ethernet network is configured as Dynamic Host Control Protocol (DHCP), the IP address of the proposed system is 172.16.4.31. Operator can use this IP address, to access the system for monitoring the report. The login page is shown in Figure 8 and a registered operator alone has the provision to access the reports with their user ID and password provided by authority.

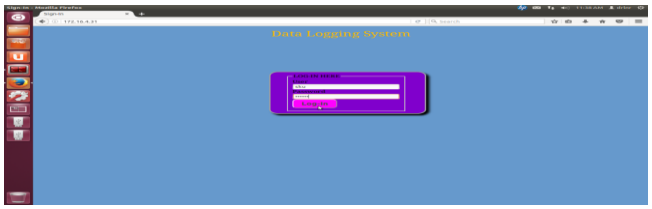

Figure 9. Login webpage screenshot

After the successful login the reports generation page will open as shown in Figure 9. In the reports page the serial number, instrument switched on date time, name of the instrument, status, ID and the total time duration of the instrument ON state are displayed. The instrument manager analyzes the data like which instrument is ON and how much time it is ON using these parameters to estimate the energy, power and the life time of the instrument.

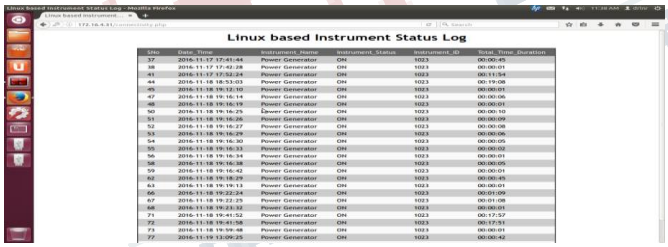

Figure 10. Screenshot of report generation

V. CONCLUSION

This system plays a vital role in cutting down the cost and area requirement. The embedded Linux based real-time event data logger system has an advantage that it can continue its operation even after a power interruption without human intervention. The BeagleBone black embedded web server is an effective solution for industry automation or smart home to acquire the data and reproduce it with current and previous data, which is done on clients demand which stands out in comparison to that of the traditional method of using PC based Unix or Windows servers.

VI.ACKNOWLEDGMENT

The authors acknowledge the help and support of UGC-PDF grant and Sri Krishnadevaraya University, Anantapur, A.P., India, for providing the facilities for carrying this research work.

REFERENCES

[1] Choi M-J, Ju H-T. An efficient embedded web server for web based network element management. Network Operations and Management Symposium, 2000. NOMS 2000. 2000 IEEE/ IFIP; 2000 Apr; Honolulu. p. 187–200.

[2] Manivannan M, Kumaresan N. Embedded web server and gprs based advanced industrial automation using linux rtos. Int J Eng Sci Tech. 2010; 2(11):6074–81.

[3] Zhan mei-qiong and Ji chang-peng; "Research and Implementation of Embedded Web Server", International Conference on Multimedia and Information Technology, PP. 123-125, Dec 2008.

[4] Mi-Joung Choi, Hong-Taek Ju, Hyun-Jun Cha, Sook-Hyang Kim, and J. Won-Ki Hong, "An Efficient Embedded Web Server for Web-based Network Element Management," International Journal of Network Management, Vol. 10, May 2000.

[5] Zhang Wenya, "Design and Implementation of Network Video Monitoring System Based on Embedded Linux," Southwest Jiaotong University Master Degree Thesis, May 2009, pp. 147-148.

[6] https://www.sparkfun.com/datasheets/Components/DS1307.pdf

[7] https://learn.adafruit.com/adding-a-real-time-clock-to-beaglebone-black/overview

[8] HTML The Complete Reference by Powell, Thomas A, Publisher MGH, ISBN: 0072129514.

[9] PHP for the Web By LARRY ULLMAN, Publisher Peachpit Press, Copyright © 2011 by Larry Ullman.

[10] MySQL Cook book, By Paul DuBois; Publisher O'Reilly on dated October 2002; ISBN:0-596-00145-2, pages 1022.