ISSN (Online) 2394-6849

International Journal of Engineering Research in Electronics and Communication Engineering (IJERECE)
Vol 4, Issue 3, March 2017

ARM Based Smart Drinking Water Distribution System

[1] J.Krishna Chaithanya, [2] Dr. T. Ramashri
[1] Assistant Professor Dept. of ECE, Vardhaman College of Engineering, Hyderabad
[2] Professor Dept. of ECE, SVUCE, SVU, TIRUPATI

***Abstract:* -- The aim of this project is to implement a smart drinking water distribution system through smart card and detecting contamination of water so that people in rural, slums and also in area where there is scarcity of ground water. Not only providing safe and clean water through this system we can also reduce the wastage of water and crowding near the water tankers. Our approach is to design a system which determines the purity of supplied water and with the help of a smart card setup controls the amount of quantity to each member and also controls the illegal supply of water, thereby organizing the supply of water with light-weight implementation and reliable long time operation. This system adopts the ARM based controller to read the inputs from the sensor and determine the contamination levels if any and then provide the supply of water, Smart card system and GSM wireless network. The system can run well under the unattended operation, great reducing the intensity of work and making the water monitoring more secure, reliable and economical.**

***Index Terms* — — GSM Wireless Network, Water Monitoring System, Sensor Network, Smart Card System.**

I. INTRODUCTION

The water supply systems are part of the urban infrastructure which must assure the continuity of the water distribution, the water quality control and the monitoring and control of the technological process parameters, and deal with the restrictions imposed by the water availability, hydrological conditions, the storage capacity of the tanks and water towers and the increasing diversity of water use [1][2]. As Water quality is one of the main factors to control health and the state of diseases in people and animals. Both natural processes such as soil erosion and weathering, and anthropogenic inputs such as industrial and municipal waste water discharge largely determine surface water quality in a region [3]. Dissolved oxygen (DO), pH, electrical conductivity (EC), and nitrate are the main parameters to determine the water quality[4].

The contribution of this paper is twofold. First, it proposes the need for a shift in the current monitoring paradigm and proposes the idea of monitoring the quality of water delivered to consumers, using low cost, low performance and tiny sensors. We argue that this approach can achieve more reliable quality monitoring due to the large spatially distributed deployment and the possibility of correlating the quality measurements from various consumers. Second, it presents the first step towards this goal which is the design and development of a low cost system that can be used at the premises of every consumer. The embedded systems developed can also be used in a consumer-oriented manner to continuously monitor qualitative water parameters and fusemulti-parametric sensor response in order to assess the water consumption risk at consumer level, locally and independently from other consumer measurements. The remaining of this paper is organized as follows. Section II presents the System design and analysis of architecture. Section III presents the Hardware Platform, experimental implementation of the hardwaremodules and validates the results of the developed system. Finally the paper ends with the conclusion.

II. SYSTEM DESIGN

The developed system of smart drinking water distribution consists of following modules, such as, Micro Controller LCD Display, RFID Module, GSM Module, Flow Sensor, water level indicator, pH sensor, Magnetic Switch and Solenoid Valve.

ISSN (Online) 2394-6849

International Journal of Engineering Research in Electronics and Communication Engineering (IJERECE)
Vol 4, Issue 3, March 2017

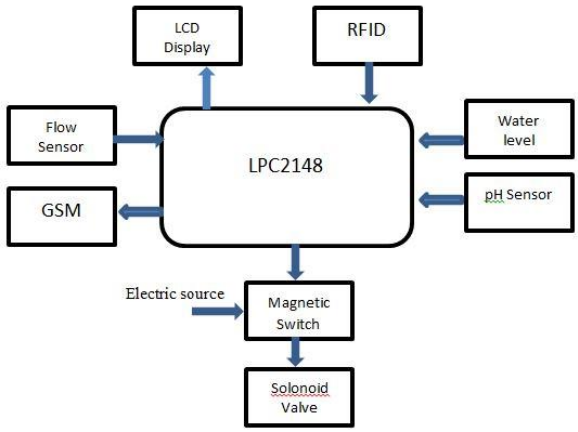

Fig 1: System architecture of Contamination detection and smart drinking water distribution system

The proposed systems have three main advantages over fixed monitoring systems as the following.

1) The proposed systems do not require a high initial cost and maintenance costs.
2) System is portable and can be used at different sites.
3) Monitoring of water quality at the consumer end ensures all the users are getting quality drinking water and water distribution is regulated and not need to wait near the tankers or distribution points/spots.

pH sensor is deployed to determine the purity of supplied water and with the help of a RFID setup controls the quantity of water to each member and also controls the illegal supply of water, thereby organizing the supply of water with light-weight implementation and reliable long time operation. This system adopts the ARM based controller to read the inputs from the sensor and determine the contamination levels if any and then provide the supply of water, RFID card system and GSM wireless network. A message will be sent through GSM module to the in-charge of water distribution point whenever thereis a change inwater quality or less level of water. This system can run well under the unattended operation, great reducing the intensity of work and making the water monitoring more secure, reliable and economical.

III. HARDWARE PLATFORM

Figure3.2 shows the schematic diagram of the project in which we have deployed pH sensor to monitor the quality of water and water level indicator to check the level of water in the tank. GSM module is used to send the information regarding water quality and water levels whenever they go beyond threshold point. RFID reader is used to authenticate the user to reduce the illegal consumption of water near water distribution points (WDP). Automate Solenoid valve is connected at the supply end to automate the water supply without any human interference. Water flow sensor is deployed to measure the amount of water delivering to an individual.

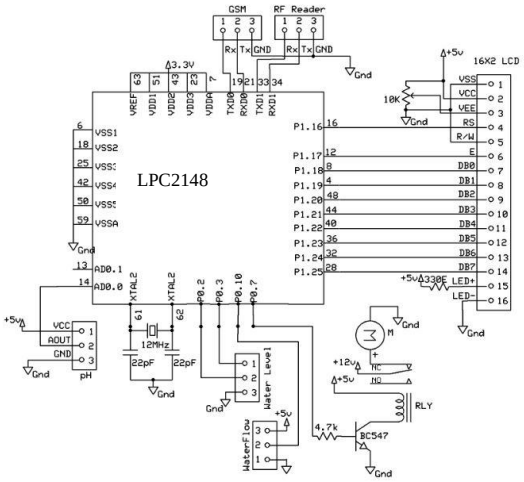

Fig2: Schematic Diagram

The motivation for creating this project is to develop a smart drinking water distribution system to deliver pure water to every individual by monitoring the water quality regularly before supplying at the consumer end without any human interference. Regulating the water consumption by indulging RFID authentication which reduces the illegal water connection through distribution points.

In-pipe modules flow meter and solenoid valve:

Flow meter has 3 pins VCC, GND and OUT. VCC and GND pin of flow meter are connected to +5V and ground respectively. OUT pin is connected to P0.10 pin of LPC2148 microcontroller. Flow meter generates pulses whenever fluid flows through the rotary wheel which is present inside the

ISSN (Online) 2394-6849

International Journal of Engineering Research in Electronics and Communication Engineering (IJERECE)
Vol 4, Issue 3, March 2017

flow meter. It generates 450 pulse per 1000 milliliters.

Solenoid valve is an electromechanically operated valve. The valve is controlled by an electric current through a solenoid: in the case of a two-port valve the flow is switched on or off; in the case of a three-port valve, the outflow is switched between the two outlet ports. Multiple solenoid valves can be placed together on a manifold.

Solenoid valves are the most frequently used control elements in fluidics. Their tasks are to shut off, release, dose, distribute or mix fluids. They are found in many application areas. Solenoids offer fast and safe switching, high reliability, long service life, good medium compatibility of the materials used, low control power and compact design.

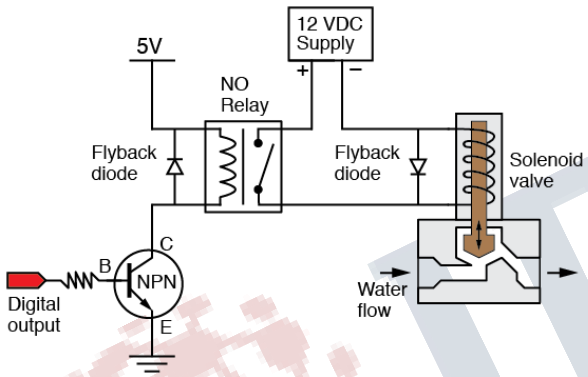

Fig 3: Solenoid valve interfacing circuit

In this project solenoid valve is operated on 12V, it is very tough task to handle it with 3.3v so a magnet switch (Relay) with external 12V electric source is placed in between solenoid valve and controller pin to drive solenoid valve. Figure 3.9 shows the typical connection between valve and controller through relay.

When the coil is energized, the resulting magnetic field pulls the plunger to the middle of the coil. The magnetic force is unidirectional — a spring is required to return the plunger to its un-energized position. Flyback diodes are used to block back emf generated by the inductors to reduce electromagnetic Interference.

Algorithm and flow chart of the system is stated below

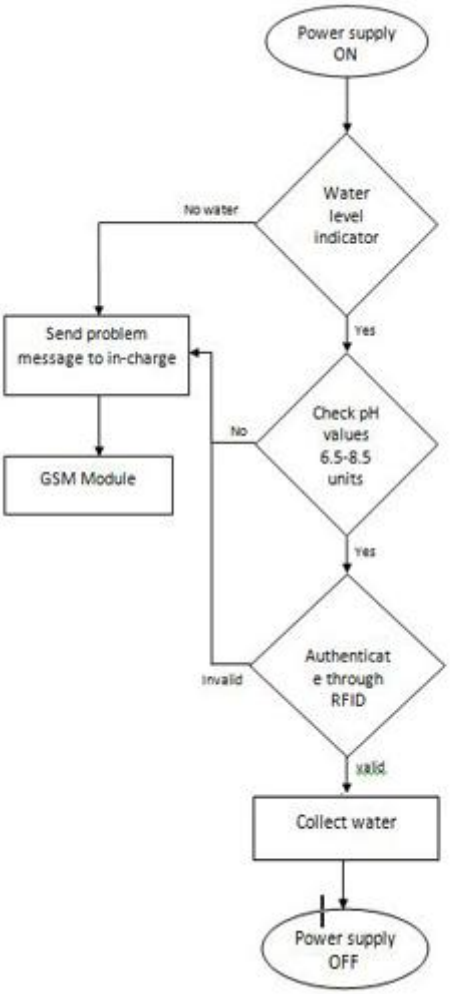

Fig 4: Flow Chart

Algorithm of the project:

ISSN (Online) 2394-6849

International Journal of Engineering Research in Electronics and Communication Engineering (IJERECE)
Vol 4, Issue 3, March 2017

Step 1	:	Switch on the power supply
Step 2	:	Indicate water level through water level indicator in distribution tank.
Step 3	:	If no water beyond the threshold level, send a message to incharge stating to fill water through GSM.
Step 4	:	If water is present then check for pH value of water present in the tank using pH sensor
Step 5	:	If the pH value is beyond 8.5 or less than 6.5 then send a message to incharge stating low water quality through GSM
Step 6	:	If pH value is in-between 6.5-8.5 then check for authentication through RFID
Step 7	:	Authenticate the person through RFID and allow water by opening solenoid valve and measure water using flow meter.

VI. RESULT

pH sensor is deployed to determine the purity of supplied water and with the help of a RFID setup controls the quantity of water to each member and also controls the illegal supply of water, flow sensor is arranged in the setup to measure the amount of water supplied per individual, thereby organizing the supply of water with light-weight implementation and reliable long time operation. A message will be sent through GSM module to the in-charge of water distribution point whenever there is a change in water quality or less level of water. Figure 4 shows the project setup of smart drinking water distribution system.

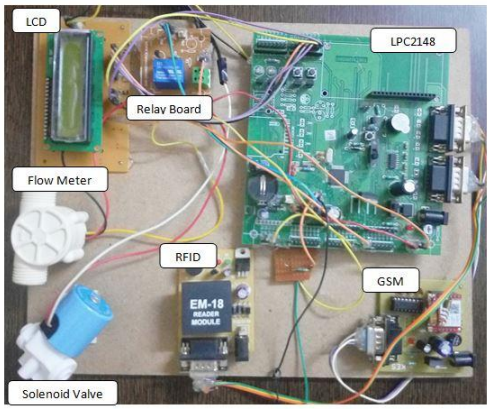

Fig: 5. System setup

V. CONCLUSION

The implementation and experimental details of smart drinking water distribution system using ARM7 architecture based LPC2148 microcontroller are presented and formulated a problem of optimized robust placement of the hard quality sensors in Drinking Water Distribution Systems for robust quality and quantity monitoring. pH sensor is deployed to determine the purity of supplied water and with the help of a RFID setup controls the quantity of water to each member and also controls the illegal supply of water, thereby organizing the supply of water with light-weight implementation and reliable long time operation. This system can run well under the unattended operation, great reducing the intensity of work and making the water monitoring more secure, reliable and economical.

This implementation can be extended by deploying more contamination detection sensor like turbidity sensor, Electric Conductivity sensor and sensors with flat measuring probes to detect anomalies. Such implementation is suitable for large deployment enabling a sensor network approach for providing rich data to water consumer and authorities.

REFERENCES

[1] Theofanis P. Lambrou, Christos C. Anastasiou, Christos G. Panayiotou, and Marios M. Polycarpou " A Low-Cost Sensor Network for Real-TimeMonitoring and Contamination Detection in Drinking Water Distribution Systems."

[2] Dongjiang Li, Weipeng Zhao, Lihua Zhang and Bo zhang*School of Control And Computer Engineering* "ARM-based Design And Realization of Water Well Monitoring Terminal".

[3] Gurkan Tuna, Orhan Arkoc, and Kayhan Gulez "Continuous Monitoring of Water Quality Using Portable and Low-Cost Approaches".

[4] By Peter Corke, Fellow IEEE, Tim Wark, Member IEEE, Raja Jurdak, Member IEEE, "Environmental Wireless Sensor Networks".

[5] C. C. Anastasiou1, P. Grafias, T. P. Lambrou, A. Kalli1 and C. Onisiphorou "Use of holding tanks and their effect on the quality of potable water in households; the case study of cyprus"

[6] J. Hall et al., "On-line water quality parameters as

indicators of distribution system contamination," J. Amer. Water Works Assoc., vol. 99, no. 1, pp. 66–77, 2007.

[7] M. V. Storey, B. Gaag, and B. P. Burns, "Advances in on-line drinking water quality monitoring and early warning systems," Water Res., vol. 45, no. 2, pp. 741–747, Jan. 2011.

[8] D. Hart, S. McKenna, K. Klise, V. Cruz, and M. Wilson, "CANARY: A water quality event detection algorithm development tool," in Proc. World Environ. Water Resour. Congr., 2007.

[9] G. Tuna and K. Gulez, "Energy harvesting techniques for industrial wireless sensor networks," in Industrial Wireless Sensor Networks: Applications, Protocols, Standards, and Products. Cleveland, OH, USA: CRC Press, 2013.

[10] Whittle, M. Allen, A. Preis, and M. Iqbal, "Sensor networks for monitoring and control of water distribution systems," in Proc. 6th Conf. Structural Health Monitor. Intell. Infrastruct., 2013. [42] KAPTA 3000-AC4 Product Technical Datasheet, KAPTA, Boulder, CO, USA, 2014.

[11] B. H. Tangenaet al., "A novel approach for early warning of drinking water contamination events," in Proc. Water Contaminate. Emergencies Conf., 2011, pp. 13–31.

[12] M. J. Moorcroft, J. Davis, and R. G. Compton, "Detection and determination of nitrate and nitrite: A review," Talanta, vol. 54, no. 5, pp. 785–803, Jun. 21, 2001.

[13] M. T. Downes, "An improved hydrazine reduction method for the automated determination of low nitrate levels in freshwater," Water Res., vol. 12, no. 9, pp. 673–675, 1978.

[14] K. Sundara-Rajan, L. Byrd, and A. V. Mamishev, "Moisture content estimation in paper pulp using fringing field impedance spectroscopy," IEEE Sensors J., vol. 4, no. 3, pp. 378–383, Jun. 2004

[15] S. M. Radke and E. C. Alocilja, "A microfabricated biosensor for detecting foodborne bioterrorism agents," IEEE Sensors J., vol. 5, no. 4, pp. 744–750, 2005.

[16] S. C. Mukhopadhyayet al., "Low cost sensing system for dairy products quality monitoring," in Proc. IEEE Instrum. Meas. Technol. Conf. (IMTC), May 2005, vol. 1, pp. 244–249.

[17] V. Mamishevet al., "Interdigital sensors and transducers," in Proc. IEEE Sens. Appl. Symp., May 2004, vol. 92, no. 5, pp. 808–845.

[18] J. W. H. Adam, "Health aspects of nitrate in drinking water and possible means of denitrifications," Water SA, vol. 6, no. 2, pp. 79–84, 1980.

[19] S. X. Liu, S. W. Hermanowicz, and M. Peng, "Nitrate removal from drinking water through the use of encapsulated microorganisms in alginate beads," Environment. Technol., vol. 24, no. 9, pp. 1129–1134, 2003.

[20] M. Fan, C. C. Willhite, and S. A. Book, "Evaluation of the nitrate drinking-water standard with reference to infant methemoglobinemia and potential reproductive toxicity," *Regul. Toxicol. Pharmacol.*, vol. 7, no. 2, pp. 135–148, Jun. 1987.