ISSN (Online) 2394-6849

International Journal of Engineering Research in Electronic and Communication Engineering (IJERECE) Vol 3, Issue 6, June 2016

A Novel Approach for Radar Image De-Noising Using Non Sub Sampled Contour Let Transform and Adaptive Threshold Algorithm

[1] Kanike Vijay Kumar, [2] M.V.Ramana Reddy [3] M. Jyothirmai
[1][2][3]Assistant Professor, Dept. of ECE, Ravindra College Of Engineering For Women, Kurnool

***Abstract*- Aiming at the problem of ground penetrating radar image de-noising, a new adaptive image de-noising algorithm based on non sub sampled Contour let transform is proposed. The algorithm firstly performs non sub sampled Contour let transform to the noise image, to obtain the coefficients of each directional sub band and each scale, then, according to the energy of the coefficient, the de-noising threshold value is adjusted adaptively. Simulation results show that, compared with the wavelet threshold de-noising algorithm, the proposed algorithm can effectively remove the Gauss white noise in the image, improve the peak signal to noise ratio (PNSR), while preserving the edge details of the image, it can improve the PSNR value and reduce the Gibbs phenomenon.**

***Index Terms*—Non sub sampled Contour let Transform; De-noising; Adaptive Threshold**

I. INTRODUCTION

The images are often contaminated by noise in the process of acquisition and transmission, such as white noise in optical image. The presence of noise reduces the resolution of the original image, which seriously affects the subsequent classification and identification of target [1]. Therefore, image de-noising has become an important method in image preprocessing, which aims to improve the image quality and highlight the characteristics of the image itself. Donoho and stone John proposed the wavelet threshold shrinkage method, that proved the optimality of Donoho threshold [2], but the shrinkage threshold is the upper threshold value, not the best shrinkage threshold, so that too many wavelet coefficients are set to zero, damage the details of the image. In recent years, the hot spot problem of wavelet de-noising is to study the statistical model of image wavelet coefficients. The purpose is to make accurate the model of non Gauss and each other image wavelet coefficients, and then use the prior information to estimate the wavelet coefficients of the original image in the Bayes framework. Chang et al. defined the priori model of the original image wavelet coefficients as the generalized Gaussian model, and put forward the corresponding Bayes shrink de-noising algorithm[3], Portilla et al. used a Gaussian scale mixture model for the image de-noising [4], Crouse et al. get through invisible Markov tree model for the image de-noising [5]. Some of these models are within the scale model, some of which are the scale model. Sendur et al. proposed a dual variable model of image wavelet coefficients and the corresponding Bishrink algorithm, which achieved good effect in image de-noising [6].

However, wavelet transform coefficients in the high-dimensional present non sparse and lack of multi-directional selectivity, multi-scale geometric analysis method came into being, there have been a series of multi-scale analysis tools such as Ridgeler, Curvelet, Bandelet and Contour let. 2002, Do et al. put forward an image representation method of multi-directional, multi-resolution, namely, Contour let transform theory [7-10]. Contour let transform is proposed as an analytical tool to solve multi-dimensional singularity [8], its main feature is that it has a good direction sensitivity and anisotropy, can capture the edge information in different scales and frequencies of the image to the sub band. However, the Contour let transform is lack of shift invariance, and the Gibbs effect will be introduced in the image processing. Arthur et al. put forward a new Contour let transform with shift invariance [11], it is non sub sampled Contour let transform (NSCT), getting through an iterative non sub sampled filter bank obtains characteristics of the shift invariance, multi-resolution and multi-directional. It can be used for image de-noising, and achieved good effect. In this paper, combining non sub sampled Contour let transform and adaptive transform, an adaptive image de-noising algorithm based on non sub sampled Contour let transform is proposed. Compared with the image de-noising algorithm of wavelet transform, the objective evaluation index of the peak signal to noise ratio (PNSR) and the subjective effect of the proposed algorithm have a significant increase and improvement.

ISSN (Online) 2394-6849

International Journal of Engineering Research in Electronic and Communication Engineering (IJERECE) Vol 3, Issue 6, June 2016

II. CONTOUR LET TRANSFORM AND NON SUB SAMPLED CONTOUR LET TRANSFORM

2.1. Contour let Transform

Contour let transform based on the idea of curve let is a multi-scale, multi-directional image representation, with good completeness, time and frequency domain characteristics and multi-resolution characteristics, etc., can achieve the coefficient represention of image information. Different from Ridgelets, Curvelets, Contour let transform is directly built on the discrete domain, avoiding discrete processes that discrete signal processing needs, can directly implement sparse representation of image contour or edge information. Since Contour let transform has good performance of sparse representation, making it in the field of image de-noising have a very broad application prospect.

The Laplace Pyramid Filter bank (LP) transform [12] and the Directional Filter Bank transform (DFB) each independently constituted, in which multi-scale analysis captures the singular points [13], multi-directional analysis will make consistent direction breakpoints connect into basic outline segment, to achieve full reconstruction [14].

As shown in Figure 1, the LP decomposition can produce a low pass part b, and the difference image a, which avoids the occurrence of mixing phenomenon. In the graph, H is a decomposition filter, M is a sampling matrix, and G is a synthetic filter. This treatment can be recycled, thus formation of the N layer low-pass and high frequency detail part, and get the corresponding sub band coefficients of low frequency and high frequency, and complete pyramid image decomposition.

This process with the inner product form is represented as:

$$S_j = < x, \psi_j > \text{.....(1)}$$

where, $\{\psi_j\}_{j=0}^{M-1}$ is the basis for the Laplasse Pyramid coefficient space R^M, x is the input signal.

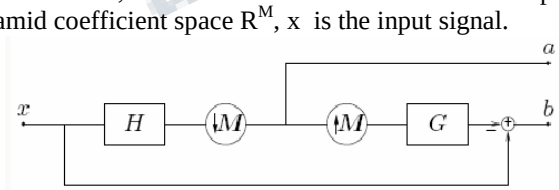

Figure 1. (a). LP Decomposition

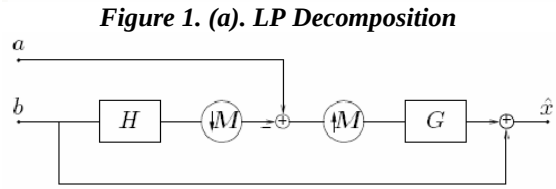

Figure 1. (b). New LP Reconstruction

The DFB is constructed by Bamberger et al.[15] that can decompose the image according to the direction, which is improved by Minh N.Do, after three decomposition, then carry out DFB decomposition for the high-frequency sub bands, the multi-frequency spectrum partition graph is shown in Figure 2, in the figure, w1,w2 indicates the frequency of the level and the vertical direction.

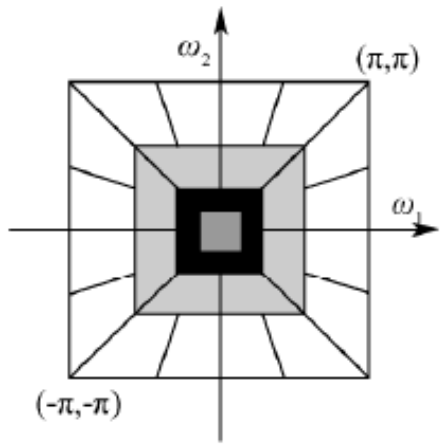

Figure 2.The Two Dimensional Multi-Frequency Spectrum Division

DFB process is expressed with the inner product form:

$$t_d = < x, \varphi_d > \text{.....(2)}$$

Where $\{\varphi_d\}_{d=0}^{N-1}$ represents the basis of the coefficient space RN (N=0,..., 2l-1) of DFB; x is the input signal. The specific process of the Contour let transform can be represented in Figure 3

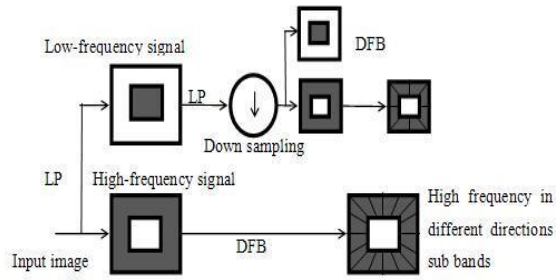

Figure 3. Specific Transformation Process

Similarly, Contour let transform with the inner product form, according to equation (1),(2), then:

$$c_{j,d} = < s_j, \varphi_d > = << x, \psi_j >, \varphi_d > = < x, \beta_{j,d} > \text{.....(3)}$$

where, $\beta_{j,d} = <\psi_j, \varphi_d>$

is the basis of the Contour let transform coefficient space R^{MXN},x is the input image.

In the process of the above Contour let transform, both two LP and DFB stages have carried out down sampling operation, so that the redundancy of the image Contour let coefficient is greatly reduced, and the same as LP redundancy, is only 1.33. Making this transformation be lack of shift invariance, if it is used in image de-noising will appear obvious Ringing effect.

2.2. Non sub sampled Contour let Transform

Compared with Contour let transform, NSCT is a redundancy transform with shiftinvariant、multi-scale and multi-resolution, this transformation remove down sampling after analysis filter and up sampling before integrated filtering which are after pyramid decomposition and directional filter decomposition, instead of up sampling was carried out to the filter, then analyze the signal filter and composite filter.

NSCT is divided into two steps:

(1) The multi-scale decomposition for image, that implemented by non sub sampled pyramid filter. The image is decomposed into a low-pass sub band and a band-pass sub band through non sub sampled pyramid, the next every level non sub sampled pyramid decomposition is carried out iteration in the low frequency sub band, finally, the image is decomposed into a low-pass sub band and a plurality of band-pass sub band, as shown in Figure 4 (a). The image is decomposed into a low-pass sub band c_0 and three band-pass sub bands c_1,c_2 andc_3 through non sub sampled three pyramid, Figure 4 (b) is the corresponding frequency response.

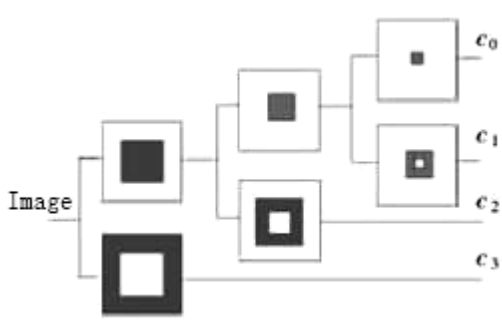

(a) Non sub sampled three pyramid decomposition structure

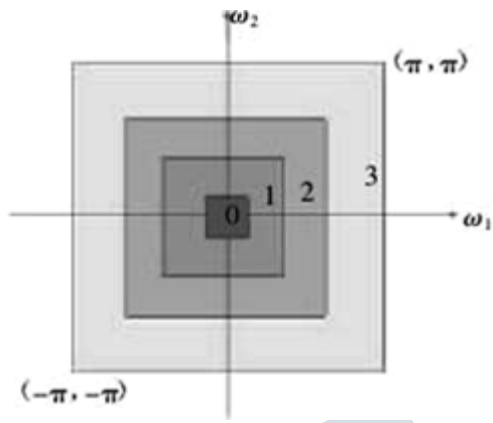

(b) The ideal frequency division of non sub sampled pyramid

Figure 4. Non sub sampled Pyramid Decomposition

The condition that non sub sampled pyramid filter and non sub sampled direction filter guarantee signal perfect reconstruction is: filter is satisfied the Bezout equation

$$H_0(z)G_0(z) + H_1(z)G_1(z) = 1 \text{.....}(4)$$

Among them, $H_0(z)$ and $H_1(z)$ represents the decomposition of the filter, $G_0(z)$ and $G_0(z)$ represents the reconstruction filter, as shown in Figure 5 (a). (2)Non sub sampled directional filter is carried out direction decomposition at each level band-pass sub band of non sub sampled pyramid decomposition, the filter bank separates the entire 2D frequency space into J (the number of decomposed direction) wedge-shaped sub bands, and put on singular points in the same direction into a factor. Figure 5 (b) shows the decomposition structure of four channels non sub sampled directional filter bank (the black part of the figure represents the passed frequency section). The first level is the fan filter $U_i(z^Q)$ of up sampling , the second is the square frequency band of up sampling, combined with the first filter can achieve the filter decomposition of four directions, the frequency division of four channels non sub sampled filter bank is as shown in Figure 5 (c).

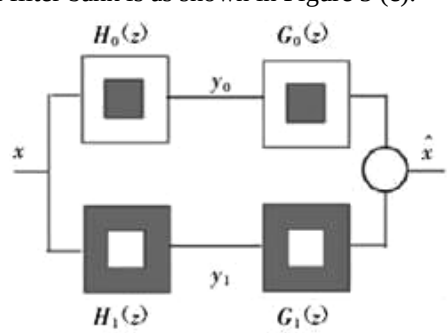

(a) Pyramid non sub sampled filter bank

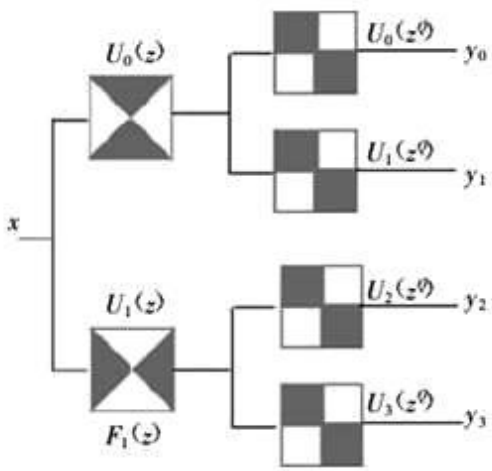

(b) The decomposition structure of four channels non sub sampled directional filter banks

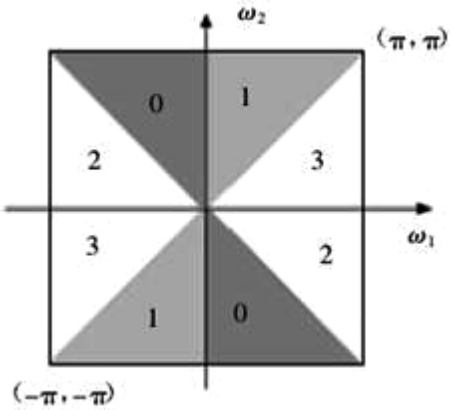

(c) The frequency division of four channels non sub sampled filter bank

Figure 5. Non sub sampled Filter Bank

After the above two steps, the NSCT is decomposed, after conversion, the size on each directional sub bands of each scale is the same as the original image, its redundancy achieved $1+\sum_{j=1}^{J}2^{lj}$, Figure 6 is the schematic diagram of two layers Contour let transform.

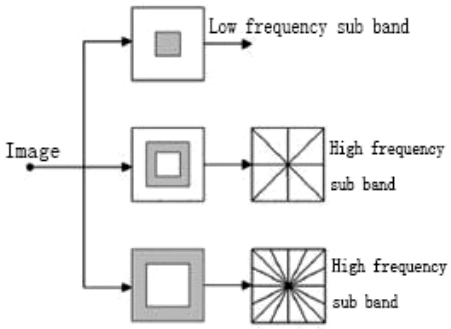

(a) Two layers NSCT diagram

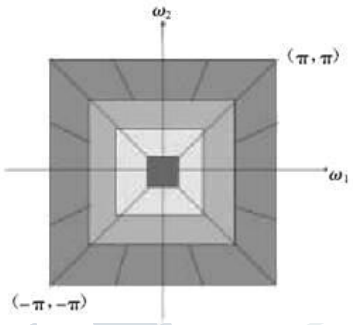

(b) The ideal NSCT frequency division

Figure 6. Non sub sampled Contour let Transform 3. Adaptive Threshold Image De-noising Based on no sub sampled Contour let Transform

3.1. The Principle of Adaptive Threshold De-noising Based on Non sub sampled Contour let Transform

NSCT adaptive threshold de-noising is determined in two steps:

(1)Set different thresholds for different scales. The model of NSCT with noisy image is:

$$d_k^j = c_k^j + n_k^j \text{ .....(5)}$$

Where d_k^j, c_k^j and n_k^j are respectively represents the coefficient of the noisy image, the original image and noise after NSCT when the scale is k and direction is j

$$k = 0,1,....,K-1,\ j = 0,1,...,J-1,$$

K is the decomposed scale of NSCT,

J is the decomposed direction of the layer.

Compared with the wavelet transform, the direction of NSCT is more flexible, and the size of the transform domain is the same as that of the original image. In the same

scale and direction, the NSCT coefficient is less than wavelet coefficient. Use the wavelet multi-scale threshold de-noising, the threshold function is

$$d_k^j = \begin{cases} d_k^j, \left|d_k^j\right| \geq \delta_k^j \\ 0, else \end{cases} \quad \sigma\sqrt{2\ln(N)} \times 2^{(k-K)/2}, \text{ in}$$

where σ is obtained using the method of median estimate, $\sigma = {}^{Median[|d_1|]}/_{0.6745}$, d1 ,is the high frequency coefficient that the first layer of the noisy image is wavelet decomposed, N is the total number of pixels. NSCT scale threshold function requires that the wavelet multi-scale threshold function is divided by a factor of more than 1, in the NSCT, select the "maxflat" pyramid filter to three layer decomposition and "dmaxflat7" carry out directional filter, when the directions are respectively 2^2,2^3 and 2^4 , research finds that, under the condition of NSCT scale threshold function δ_k is formula (6),the de-noising effect is best.

$$\frac{\sigma\sqrt{2\ln(N)} \times 2^{(k-K)/2}}{5.7} \text{ .....(6)}$$

(2)According to the energy ratio of different direction coefficients d_k^j at the same scale, adjust adaptively δ_k. Since NSCT is a linear transform, in the case of small noise, the energy of d_k^j is $e_k^i = \sum_x \sum_y d_k^j(x,y)^2$ .....(7)

The value of e_k^i is larger, shows that the outline details are more when image is in k scale and j direction; the value of e_k^i is smaller, shows that the outline details are less when image is in k scale and j direction. Similarly, the energy ratio in different directions at the same scale as follows:

$$f(e_k^i) = \frac{e_k^i}{\sum_{j=1}^{J} e_k^i} \text{ .....(8)}$$

The value of $f(e_k^i)$ is larger, indicates that the outline details are more in this direction, When the threshold is used to de-noising, the smaller threshold value should be set; the value of $f(e_k^i)$ is smaller, indicates that the outline details are less in this direction, the larger threshold value should be set. After several experiments, NSCT adaptive threshold function is in k scale and j direction:

$$\delta_k^j = \delta_k \times \frac{1 - \frac{J}{4} \times f(e_k^i)}{5.7} \text{ .....(9)}$$

3.2. The Step of Adaptive Threshold De-noising Based on Non sub sampled Contour let Transform

(1) Carry out NSCT to de-noising image, obtain the coefficient of j direction when the scale is k , and calculate the energy e_k^i the total energy $\sum_{j=1}^{J} e_k^j$ of all directions and $f(e_k^j)$ of the d_k^j;

(2) In accordance with the formula (8), calculate NSCT adaptive threshold δ_k^j in k scale and j direction;

(3) Carry out threshold processing. In this paper, hard threshold de-noising method is adopted:

$$d_k^j = \begin{cases} d_k^j, \left|d_k^j\right| \geq \delta_k^j \\ 0, else \end{cases} \text{ .....(10)}$$

(4) Carry out the inverse transform to d_k^j, get the image after de-noising.

IV EXPERIMENTAL RESULTS

In order to verify the effectiveness of the proposed algorithm in this paper, a simulation experiment is adopted on the Gauss white noise ground penetrating radar image, which the mean value is zero, the variance is 15 and 25. Figure7 (a) shows the original image that ground penetrating radar detects the three targets. Since the ground penetrating radar data is from each channel A-SCAN probe data, the wavelet threshold filtering algorithm[17] is used to GPR original image, get the processed image as shown in Figure7 (b), the processed image which uses the algorithm of adaptive threshold de-noising based on non sub sampled Contour let Transform that presented in this paper is shown in Figure7 (c).

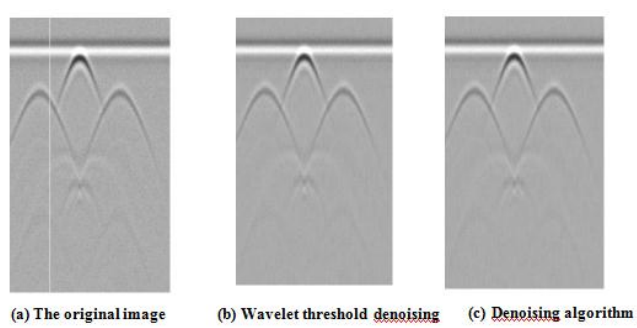

Figure 7. The De-noising Results of Different Algorithms when Variance is 25

Table1 shows the PSNR value of wavelet threshold de-noising method and this paper de-noising method.

Table 1. The PSNR Value of Threshold De-nosing

Image	Noise standard variance	PSNR/dB		
		The original image	Wavelet threshold denoising	The algorithm in this paper
The GPR image	15	24.85	30.12	33.06
	25	20.53	28.63	28.32

From table 1 it can be seen that the PSNR value of the proposed de-noising algorithm in this paper is significantly higher than that of wavelet threshold de-noising algorithm, but the difference is reduced after noise enhancing. As can be seen in Figure 7, the proposed de-noising algorithm can effectively remove the noise while preserving the image details.

V CONCLUSION

This paper proposes an adaptive image de-noising algorithm based on non sub sampled Contour let Transform. Use the NSCT characteristics of shift invariance, multi-resolution and multi-direction, the NSCT coefficients can be adjusted adaptively according to the energy of each scale and direction. Simulation results show that compared with wavelet threshold algorithm, the proposed method can obtain more PSNR value when the noise is lower, and can effectively reduce the Gibbs distortion while preserving the edge details of the image; noise enhances, the advantage of the proposed method is weakened. In the strong noise environment, how to further improve the PSNR value and improve the image quality will be the focus on the next study.

REFERENCES

[1] M. S.-liang, W. A.-li and Y. M.-Ji, "A Novel Image De-noising Method Based on Curvelet Transform", [J]. JOURNAL HARBIN UNIV. SCI. & TECH. ,vol. 13, no. 2, (2008), pp. 78-81.

[2] D. L. Donoho, "De-noising by soft-thresholding, [J]. IEEE Trans on IT, (1995), vol. 41, no. 3, pp. 613-627.

[3] S. G. Chang, B. Yu and M. Vetterli, "Adaptive wavelet thresholding for image de-noising and compression", [J].IEEE Trans. on Image Processing, vol. 9, no. 9, (2000), pp. 1532-1546.

[4] J. Portilla, V. Strela and M. J. Wainwright, "Image de-noising using scale mixture of Gaussians in the wavelet domain", [J]. IEEE Trans. on Image Processing, vol. 12, no. 11, (2003), pp. 1338-1351.

[5] M. S. Crouse, R. D. Nowak and R. G. Baraniuk, "Wavelet-based statistical signal processing using hidden Markov models ", [J]. IEEE Trans. on Image Processing, vol. 46, no. 4, (1998), pp. 886-902.

[6] L. Sendur, I. Selesnick and W. Bivariate, "Shrinkage functions for wavelet-based de-noising exploiting interscale dependency", [J]. IEEE Trans. on Signal Processing,vol. 50, no. 11, (2002), pp. 2744-2756.

[7] M. N. Do, M. Vetterli, "Contour lets: A directional multiesolution image representation ",C]. International Conference on Image Processing, vol. 1, (2002), pp. 357-360.

[8] M. N. Do and M Vetterli, "The Contour let transform: An efficient directional multiresolution image representation", [J]. IEEE Trans Image Process,vol. 14, no. 12, (2005), pp. 2091-2106.

[9] D. Y. Duncan and M. N. Do, "Directional multiscale statistical modeling of images using the Contour let transform", [J]. IEEE Trans Image Process,vol. 15, no. 6, (2006), pp. 1610-1620.

[10] M. N. Do and M Vetterli, "Pyramidal directional filter banks and curvelets", [C]. Proceedings of International Conference on Image Processing, (2001) October, pp. 158-161.

[11] A. L. Cunha, J. Zhou and M. N. Do, "The non sub sampled Contour let transform: Theory desing and application", [J]. IEEE Trans Image Processing, (2006), vol. 15, no. 10, pp. 3089-3101.

[12] N. Weyrich and G. T. Warhola, "Wavelet shrinkage and generalized cross validation for image de-noising", [J]. IEEE Transactions on Image Proceeding, vol. 7, no. 1, (1998), pp. 82－90.

BIBLIOGRAPHY

Mr. KANIKE VIJAY KUMAR received his B.Tech degree in Electronics and Communication Engineering from SJCET, Yemmiganur, Affiliated to J.N.T.U.A Ananthapuram, A.P in

2009 and M.Tech. Post Graduate in Communication and Signal Processing in GPREC, Kurnool, JNTU Ananthapuram, A.P. in 2012. Currently He is working as Assistant Professor in Ravindra College of Engineering For Women, Kurnool, A.P., India. He published Five technical papers in various International journal and National conferences. His current research interests include Signal Processing, Digital Image Processing and Communications.

Mr. M.VENKATA RAMANA REDDY received his B.Tech degree in Electronics and Communication Engineering from SJCET, Yemmiganur, Affiliated to J.N.T.U.A Ananthapuram, A.P in 2008 and M.Tech. Post Graduate in Digital Electronics and Communication systems in AITS, Kurnool, JNTU Ananthapuram, A.P. in 2012. Currently He is working as Assistant Professor in Ravindra College of Engineering For Women, Kurnool, A.P., India. He published Two technical papers in various International journal and National conferences. His current research interests include Signal Processing, Digital Image Processing and Communications.

Ms. M.JYOTHIRMAI received her B.Tech degree in Electronics and Communication Engineering from SCET, kurnool, Affiliated to J.N.T.U.A Ananthapuram, A.P in 2006 and M.Tech. Post Graduate in in Communication and Signal Processing in GPREC, Kurnool, JNTU Ananthapuram, A.P. in 2012 Currently she is working as Assistant Professor in Ravindra College of Engineering For Women, Kurnool, A.P., India. She published four technical papers in various International journal and National conferences. Her current research interests include analog and Digital Communications.