ISSN (Online) 2394-6849

International Journal of Engineering Research in Electronic and Communication Engineering (IJERECE) Vol 3, Issue 6, June 2016

Vehicle TYRE Pressure Monitoring System

[1]Dr.Manoj Priyatham.M, [2]Madhukesh. S, [3]Bharath.D.B, [4]Chandan.N,[5]Pavan.R
Department of Electronics and Communication Engineering,
[1][2][3][4]R.R.I.T. [2] Dr SMCE ,Bengaluru, Karnataka, India

Abstract- **TYRE pressure monitoring system (TPMS) is implemented in the vehicles to monitor the variations in tire pressure. The safe driving can be accomplished as TPMS automatically find outs the tire pressure in real-time and warns the drivers to take measures which prevents bursting of tires thereby avoids the possibility of an accident. This paper showcases on the implementation of vehicular tire pressure monitoring system using sensors. Also conveys the influence of tire pressure on traffic safety and environmental protection.ARM7 Processor and ZigBee are used for wireless communication with the tires.**

Keywords: **ARM7 Processor, Tire Pressure Monitoring System, Zigbee.**

I. INTRODUCTION

In conventional vehicle TYRES, the driver cannot keep track of TYRE pressure levels. By the time he notices, the pressure in the TYRE falls below threshold level due to various reasons. This leads to problems such as drop in mileage, wear and tear of TYRES and it will also affect the performance of the vehicle.

One of the major reasons for serious traffic accidents is bursting of tires. Hence the number of traffic accidents is also increasing along with the rapid growth in number of automobiles, which causes damages to vehicles as well as human body. Tire bursting is major concern for the drivers since it is very difficult to prevent. Research shows that tire burst is mainly caused by abnormal tire pressure. Thus accidents can be avoided if the tire pressure is regularly monitored .It is also observed that if the tire bursts at extremely high speed, the death rate is nearly 100%. Therefore the abnormal tire pressure affects the quality and the safety of automobile driving.

Research studies show that if the tire pressure is maintained near to its standard value and pressure changes are discovered within no time the possibility of tire-break can be avoided. Thus, many researchers and engineers are working on tire pressure monitoring system (TPMS).

One of the methods is based on the pressure sensor also called as direct-TPMS. This system makes use of pressure sensor which installed in each tire to measure the tire pressure directly and displays and monitors the pressure of each tire. According to the Transportation, Recall Enhancement, Accountability and Documentation (TREAD) Act passed by US Congress in 2008, it is necessary for all automobile manufacturers to install this tire pressure monitoring system in their vehicles produced or sold in the United States.

The objective of this paper is to design a simple, easy to install, ARM7 based circuit to monitor and record the values of air pressure sensors in the vehicle tires. It also intimates the driver regarding the same. The processor used is a low power, cost efficient chip manufactured by NXP of on-chip memory.

It communicates with the various sensor modules in real-time in order to monitor the tire pressure in the vehicles. Here the data can be read through IOT to any of the remote places using Internet of things and also parameters can be passed from IOT enabled mobile phone to monitor the values. In this paper we are going to use ARM7, which is the current dominant processor in mobile based products and software development Tool. The main intension of using ARM7 processor is it has 2 serial ports i.e.,2 UART's pins available for serial communication. The system notifies the user through alarm as well as through SMS.This system can be implemented in cab vehicles where the owner gets a notification of location through message .when the driver neglects the pressure levels of the TYRE the owner receives the message

ISSN (Online) 2394-6849

International Journal of Engineering Research in Electronic and Communication Engineering (IJERECE) Vol 3, Issue 6, June 2016

II. EXPERIMENTAL SETUP.

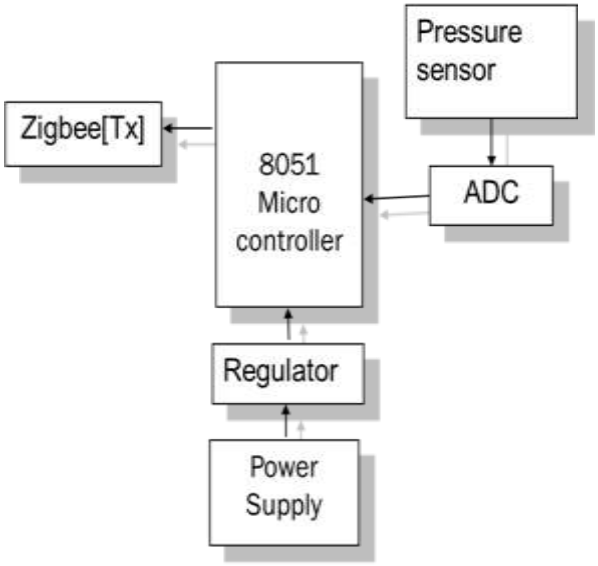

The transmitter part is where the pressure sensor is connected to the valve of the tire. Levels of pressure read from the sensor is converted into digital signals and sent to the microcontroller , these signals are sent to the main ARM7 processor through zigbee .zigbee has a range of 300m.

2.2 Pressure sensor

The MP3V5050 series piezoresistive transducer is a monolithic silicon pressure sensor designed for a wide range of applications, but particularly those employing a microcontroller or microprocessor with A/D inputs. This patented, single element transducer combines advanced micromachining techniques, thin-film metallization, and bipolar processing to provide an accurate, high level analog output signal that is proportional to theapplied pressure.

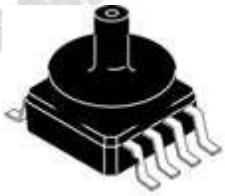

Fig 2.1: pressure sensor

2.2.1 Features

- 2.5% Maximum Error over 0° to 85°C
- Ideally suited for Microprocessor or Microcontroller-
- Based Systems
- Temperature Compensated Over -40° to +125°C
- Patented Silicon Shear Stress Strain Gauge
- Thermoplastic (PPS) Surface Mount Package
- Multiple Porting Options for Design Flexibility
- Barbed Side Ports for Robust Tube Connection

2.2.2 Operating Characteristics

Table 2.1: Operating characteristics

Characteristic		Symbol	Min	Typ	Max	Unit
Pressure Range[1]		P_{OP}	0	—	50	kPa
Supply Voltage[2]		V_S	3.7	5.0	5.5	Vdc
Supply Current		I_o	—	7.0	10	mAdc
Minimum Pressure Offset[3] @ V_S = 5.0 Volts	(0 to 85°C)	V_{off}	0.053	0.12	0.186	Vdc
Full Scale Output[4] @ V_S = 5.0 Volts	(0 to 85°C)	V_{FSO}	2.752	2.8	2.888	Vdc
Full Scale Span[5] @ V_S = 5.0 Volts	(0 to 85°C)	V_{FSS}	—	2.7	—	Vdc
Accuracy[6]	(0 to 85°C)	—	—	—	±2.5	$\%V_{FSS}$
Sensitivity		V/P	—	54	—	mV/kPa
Response Time[7]		t_R	—	1.0	—	ms
Output Source Current at Full Scale Output		I_{o+}	—	0.1	—	mAdc
Warm-Up Time[8]		—	—	20	—	ms
Offset Stability[9]		—	—	±0.5	—	$\%V_{FSS}$

1. 1.0 KPA (kilopascal) equals 0.145 psi.
2. Device is ratio metric within this specified excitation range.
3. Offset (VOFF) is defined as the output voltage at the Minimum rated pressure.
4. Full Scale Output (VFSO) is defined as the output voltage at The maximum or full rated pressure.
5. Full Scale Span (VFSS) is defined as the algebraic Difference between the output voltages at full rated Pressure and the output voltage at the minimum rated Pressure.
6. Accuracy (error budget) consists of the following:
Linearity: Output deviation from a straight line relationship With pressure over the specified pressure range.

Temperature Hysteresis: Output deviation at any temperature within the operating temperature range, after the temperature is cycled to and from the minimum or maximum operating temperature points, with zero differential pressure applied.

***Pressure Hysteresis*:** Output deviation at any pressure within the specified range, when this pressure is cycled to and from the minimum or maximum rated pressure at 25°C.

***TC Span*:** Output deviation over the temperature range of 0° to 85°C, relative to 25°C.

***TC Offset*:** Output deviation with minimum pressure applied, over the temperature range of 0° to 85°C, relative to 25°C. Variation from Nominal: The variation from nominal values, for Offset or Full Scale Span, as a percent of VFSS at 25°C.

7. Response Time is defined as the time for the incremental change in the output to go from 10% to 90% of its final value when subjected to a specified step change in pressure.
8. Warm-up Time is defined as the time required for the product to meet the specified output voltage after the Pressure has been stabilized.
9. Offset Stability is the product's output deviation when subjected to 1000 hours of Pulsed Pressure, Temperature Cycling with Bias Test.

2.2.3 Maximum Ratings

Table 2.2: maximum ratings

Rating	Symbol	Value	Unit
Maximum Pressure (P1 > P2)	P_{max}	200	kPa
Storage Temperature	T_{stg}	-40° to +125°	°C
Operating Temperature	T_A	-40° to +125°	°C

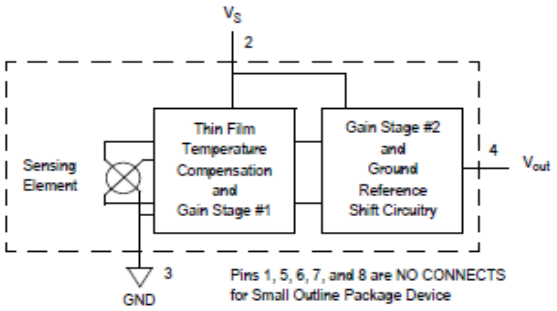

Fig 2.2: Internal circuitry

The above figure shows a block diagram of the internal circuitry integrated on a pressure sensor chip (Fully Integrated Pressure Sensor Schematic)

2.2.4 Calibration and Package

The MP3V5050 series pressure sensor operating characteristics and internal reliability and qualification tests are based on use of dry air as the pressure media. Media, other than dry air, may have adverse effects on sensor performance and long-term reliability.

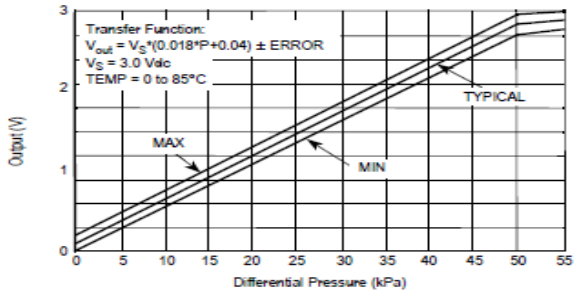

Fig 2.3: Sensor output

Above figure shows the sensor output signal relative to pressure input. Typical, minimum, and maximum output curves are shown for operation over a temperature range of 0° to 85°C.

The output will saturate outside of the specified pressure range.

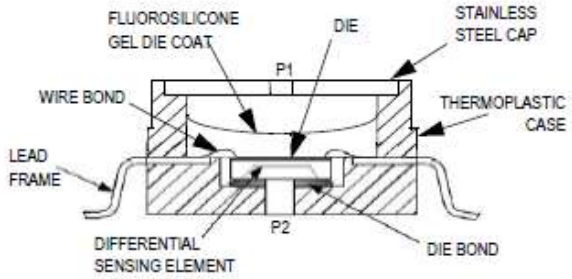

Fig 2.4: Differential/Gauge Sensing Chip

Above figure illustrates the Differential/Gauge Sensing Chip in the basic chip carrier (Case 482A). A fluorosilicate gel isolates the die surface and wire bonds from the environment, while allowing the pressure signal to be transmitted to the sensor diaphragm.

III. ZIGBEE

ZigBee is a specification for a suite of high level communication protocols using small, low-power digital radios based on an IEEE 802 standard for personal area networks.

The DigiXbee 802.15.4 modules are the easiest to use, most reliable and cost-effective RF devices we've experienced. The 802.15.4 Xbee modules provide two friendly modes of communication - a simple serial method of transmit/receive or a framed mode providing advanced features. These modules can communicate point to point, from one point to a PC, or in a mesh network.

International Journal of Engineering Research in Electronic and Communication Engineering (IJERECE) Vol 3, Issue 6, June 2016

IV. EXPERIMENTAL SETUP: RECEIVER

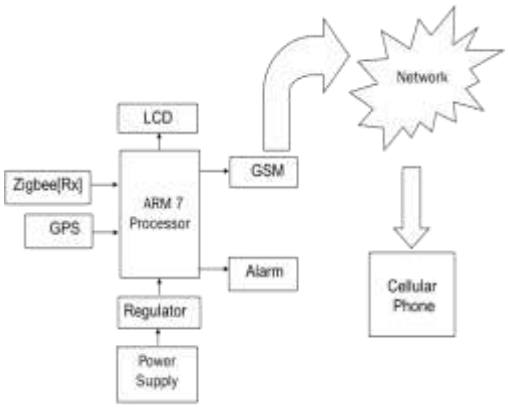

The pressure values from the transmitter are received by another Zigbee present in the receiver part.These values are displayed through LCD in real time.When the pressure value drops below the threshold the driver of the vehicle gets an alarm about the air leakage in the TYRE. If he ignores the alarm or if the alarm is not audible to him in the dense traffic, then he will receive a text alert to his mobile phone through GSM. Idea behind using the GSM in this paper is people nowadays use mobile phones which have become a prime part in human life.

3.2 ARM7 processor

The LPC2141 microcontroller is based on a 16-bit/32-bit ARM7TDMI-S CPU with real-time emulation and embedded trace support, that combine the microcontroller with embedded high-speed flash memory ranging from 32 kB to 512 kB. A 128-bit wide memory interface and a unique accelerator architecture enable 32-bit code execution at the maximum clock rate. For critical code size applications, the alternative 16-bit Thumb mode reduces code by more than 30 % with minimal performance penalty.Due to their tiny size and low power consumption, LPC2141 is ideal for applications where miniaturization is a key requirement, such as access control and point-of-sale. Serial communications interfaces ranging from a USB 2.0 Full-speed device, multiple UARTs, SPI, SSP to I2C-bus and on-chip SRAM of 8 kB up to 40 kB, make these devices very well suited for communication gateways and protocol converters, soft modems, voice recognition and low end imaging, providing both large buffer size and high processing power. Various 32-bit timers, single or dual 10-bit ADC(s), 10-bit DAC, PWM channels and 45 fast GPIO lines with up to nine edge or level sensitive external interrupt pins make these microcontrollers suitable for industrial control and medical systems.

V. ANALYSIS OF THE SYSTEM PERFORMANCE

All the functions of the developed TPMS are tested for high pressure as well as low pressure situation. The system has good measurement accuracy and it can properly warn abnormal states well within in time and rightly. The whole performance is quite good. Fig. represents the data acquired in the form of plots showing relation between applied pressure in kPa and output sensor voltage in mV at different values of and supply voltages.

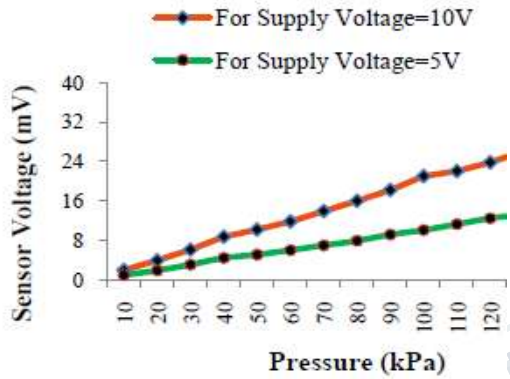

Figure 2.5. Applied Pressure Vs Output Sensor Voltage

The output voltage of sensor depends upon offset voltage, pressure applied and sensitivity of sensor.

$Vout = Voff + [Sensitivity * P]$

Where Vout = Output voltage in Mv

Voff = Offset voltage in mV

P = Pressure applied in kPa

Offset voltage is the voltage obtained at the output of sensor when input pressure applied is 0 kPa. Sensitivity is the ratio of change in output voltage with respect to change in pressure and it is measured in mV/kPa. $Sensitivity = \Delta V \Delta P (mV/kPa)$ For MPXM2202 pressure sensor used in this system the sensitivity is found to be 0.091 mV/kPa and offset voltage is ±1 mV when sensor is supplied with 5 V. This sensitivity is supply voltage dependant; hence sensitivity changes to 0.177 mV/kPa and offset voltage to ±2 mV when sensor is supplied with 10 V. The full scale voltage span of MPXM2202 is 40 mV and its linearity may vary up to 1 % of full scale voltage. Hence glitches or overshoots are observed at some points on the graph.

VI. CONCLUSION

In recent years, TPMS is emerging as major part in the research of vehicle safety system. This paper proposes a Vehicle TYRE Air Pressure Monitoring System which is based on the wireless sensors technology and also suggests the use of ARM Processor to improvise TPMS. Further, the system can be expanded to send a warning signal to the display which is integrated in the dashboard of the vehicles, thereby avoiding the occurrence of accidents. By placing an air tight container installed with this system has an ability to detect earth quakes. Also, research can be carried out to reduce the size and power consumption of sensors used in the present system so that the system becomes more efficient.

REFERENCES

[1] Y. Shiming, T. Jianbin, Hong Q., C. Chengrong, "Wireless Communication Based Tire Pressure Monitoring System," 1-4244-1312-5/07.

[2] I. H. Ho, J. M. Chung, H. C. Chen, H. W. Chiu, "A Battery-less Tire Pressure Monitoring System," 978-1-4244-2517-4/09.

[3] H. Wang, S. Yu , Y. Haung, Y. Pu, "Wireless Communication of Tire Pressure Intelligent Monitoring System Based on Sensor Networks Technology,", International Conference on Intelligent Control and Automation 2006.

[4] L. Yueming , H. Binghua, S. Jianchun, Y. Yuan, "Design and Implementation of TPMS Based on Wireless Sensor Network,", International Conference on Intelligent System Design and Engineering Application, 2010.

[5] F. Leens, "An introduction to I2C and SPI Protocol," IEEE Instrumentation and Measurement Magazine, 2009.

[6] L. Liu, X. Zhou, "Design of Intelligent Tire Safety Pre-alarm System Based on ARM9" International Conference on Informatics, 2010.

[7] M. Shao, W. Guo, "Tire Pressure Monitoring System," 978-1-4244-9439-2/11.

[8] J. Zhang, Q. Liu, Y. Zhong, "A Tire Pressure Monitoring System Based on Wireless Sensor Networks Technology," International Conference on Multi media and Information Technology, 2008.

[9] B. Fleming, "Tire Pressure-Monitoring Systems Rollout," IEEE Vehicular Technology Magazine, 2009.

[10] M. Kowaleski, "Monitoring and Managing Tire Pressure," IEEE Potentials, 0278-6648/04.

[11] Z. X. Wang, Y. Xu, G. J. Wang, "Design and Implementation of Tire Monitoring System Based on Zigbee", 978-1-4244-09.

[12] Q. Zhang, B. Liu, "Design of Tire Pressure Monitoring System Based on Resonance Frequency Method," IEEE/ASME International Conference on Advanced Intelligent Mechatronics, 2009.

[13] Dixon B. , V. Kalinin, J. Beckley, R. Lohr, "A Second Generation In-Car Tire Pressure Monitoring System Based on Wireless Passive SAW Sensors," 1-4244-0074-0/06.

[14] S. Yarnamoto, O. Nakao, H. Nishimura, "Touch Mode Capacitive Pressure Sensor for Passive Tire Monitoring System".0-7803-7454-1/02.