ISSN (Online) 2394-2320

International Journal of Engineering Research in Computer Science and Engineering (IJERCSE)
Vol 6, Issue 7, July 2019

Auxillary Safety Locking System of Vehicle Doors Using Arduino

[1] Babu. T, [2] S.K. Suriya Kumar, [3]P Sooriya Prakash, [4]S Bala Vignesh , [5]P Ayyapan
[1]Assistant Professor, [2][3][4][5] Student
[1][2][3][4][5] Sri Sairam Engineering College,Chennai.

***Abstract* – The main aim of the project is to prevent the Dooring accidents and to provide safety for the passengers and pedestrians. We are eliminating this problem by the use of Auxiliary Safety locking system connected to each door of the vehicle using Arduino. To prevent accident due to passenger's carelessness, the upcoming vehicle is sensed using an ultrasonic sensor and the doors of the vehicle are locked automatically. Due to this, the passengers can't open their car door from inside while the vehicle is moving towards the car. After the vehicle is passed, the doors are unlocked.**

I. INTRODUCTION

Road accident is most unwanted thing to happen to a road user, though they happen quite often. The most unfortunate thing is that we don't learn from our mistakes on road. Most of the road users are quite well aware of the general rules and safety measures while using roads but it is only the laxity on part of road users, which cause accidents and crashes. Main cause of accidents and crashes are due to human errors.

Dooring is a traffic collision in which a motorist or cyclist rides into a car door or is struck by a car door that was opened quickly without checking first for cyclists by using the side mirror and/or performing a proper shoulder check out and back. Dooring accident happens when the door of a vehicle opens in the path of an unsuspecting cyclist, causing him to fall down, flip over, or swerve into traffic to avoid being hit. Although most dooring incidents are non-fatal, they can still result in serious injuries. Laws generally require drivers to check for nearby pedestrians and cyclists before entering or exiting their cars. However, it's not uncommon for busy people to swing their vehicle doors open without thinking and without checking whether someone is in their path.

Some bike lanes are also built within the 'door zone,' which can expose cyclists to hazardous obstructions. The door zone is the approximately 5 feet of space in which a cyclist faces the highest probability of being hit by a parked car. The door zone can be larger or smaller depending on the type of vehicle. Even for the most skilled cyclists, reacting safely to a sudden door movement is difficult. Many who attempt to dodge a door unexpectedly opening in front of them instead end up colliding with incoming traffic with fatal results.

II. LITERATURE REVIEW

Hampton.C.Gabler and William.T.Hollowell [2014] investigated the compatibility of cars, light trucks, and vans (LTVs) involved in traffic crashes. This provided the necessary parameters and needs that can be compatibly installed in a vehicle to reduce such accidents.

Md.Khaled Hossain and Sayed Samial Haq [2013] framed a system having accident detection technique with pin point location tracking using GSM. This provided detailed implementation of automatic mechanism in a vehicle.

Venkatesh and Vivek [2014] designed a setup to control the car door locking automatically using distance measuring system, child lock and ultrasonic sensors.

Othman M.K. Alsmadi, Anas A. Al Jallad did a research on Arduino-Based Automatic Safety Vehicle Control

"California Vehicle Code section 22517" - California Legislative Information, Retrieved February 13, 2018 states that, No person shall open the door of a vehicle on the side available to moving traffic unless it is reasonably safe to do so and can be done without interfering with the movement of such traffic.

Bruce Rauner, Chicago Governor signed into law House Bill 5143, which adds the Dutch Reach strategy to Illinois' Rules of the Road manual, as well as adding bicycle safety questions to the state driver's license test.[Aug 2018]

D. Otte and H. Johannsen works consists of detailed survey and analysis regarding the accident contribution by dooring .Claims of accidents due to dooring in Netherlands, forced the government to implement Dutch Reach, however every time there won't be surety that people would follow in all other countries regularly if implemented everywhere. This concept leads the way for

ISSN (Online) 2394-2320

International Journal of Engineering Research in Computer Science and Engineering (IJERCSE)
Vol 6, Issue 7, July 2019

introducing a safety locking mechanism which is automatic and cheaper.

Mehmet Akif stated that Arduino-based robot projects spread quickly and effectively was the first thing that this study found. Due to the contribution of Arduino technology to design and development process of educational robotics system, this study revealed that recent studies mostly focused on the efforts of integration and implementation of Arduino boards into educational activities and curriculum. This study also determined the research methods and technological tools used in the prior research and reported the difficulties and problems related to the use of the Arduino boards

III. COMPONENTS USED

The following are the components used in the system:

- Arduino UNO
- Ultrasonic Sensor
- Buzzer
- Solenoid
- LED
- Motor Drive L298N
- Jumper Wires

Arduino UNO

The Arduino UNO is a micro controller board based on the ATmega328 (data sheet). It contains 14 digital input/output pins (of which 6 can be used as PWM outputs), 6 analog inputs, USB connection, power jack, 16 MHz ceramic resonator, an ICSP header, and a reset button. It contains everything which is needed to support the micro controller; simply connect it to a computer with a USB cable or power it with an AC-to-DC adapter or battery to get started.

The Arduino UNO is the most "standard" Arduino board currently in the market, and is probably the best choice for beginners just getting started with the platform. The board is well-suited with more shields (add-on boards) than other models. Arduino simplifies the process of working with micro controllers, and offers some advantages for students, teachers and interested amateurs over other systems.The Arduino/Genuino UNO has a number of facilities for communicating with a computer, another Arduino/Genuino board, or even other micro-controllers.

Fig.1 Arduino UNO

Ultrasonic Sensor

Ultrasonic sensor emits ultrasonic pulses, and by measuring the time of ultrasonic pulse reaches the object and back to the transducer. The sonic waves emitted by the transducer are reflected by an object and received back in the transducer. After having emitted the sound waves, the ultrasonic sensor will switch to receive mode. The time elapsed between emitting and receiving is proportional to the distance of the object from the sensor.

- Working Voltage - 5 VDC
- Quiescent Voltage - <2 mA
- Working Current - 15 mA
- Detecting Range - 2 Cm - 4 m
- Trigger Input Pulse Width - 10 uS

Fig.2 Ultrasonic Sensor

A buzzer or beeper is an audio signaling device, which may be mechanical, electro-mechanical, or piezoelectric. Typical uses of buzzers and beepers include alarm devices, timers and confirmation of user input such as a mouse click or key stroke.

Buzzer is an integrated structure of electronic transducers, DC power supply, widely used in computers, printers, copiers, alarms, electronic toys, automotive electronic equipment, telephones, timers and other electronic products for sound devices. Active buzzer 5V Rated power can be directly connected to a continuous sound, this section dedicated sensor expansion module and the board in combination, can complete a simple circuit design, to "plug and play."

- Input supply - 5 VDC
- Current consumption - 9.0 mA max.
- Oscillating frequency - 3.0 ±0.5 KHz

ISSN (Online) 2394-2320

International Journal of Engineering Research in Computer Science and Engineering (IJERCSE)
Vol 6, Issue 7, July 2019

- Sound Pressure Level - 85 dBmin.

Fig.3 Buzzer

Solenoid

Solenoids are basically electromagnets. Solenoid is the generic term for a coil of wire used as an electromagnet. It also refers to any device that converts electrical energy to mechanical energy using a solenoid.

The device creates a magnetic field from electric current and uses the magnetic field to create linear motion. They are made of a coil of copper wire with an armature (a slug of metal) in the middle.When the coil is energized, the slug is pulled into the centre of the coil. This makes the solenoid able to pull (from one end) or push (from the other).

Solenoids are incredibly versatile and extremely useful. They're found in everything from automated factory equipment to paintball guns and even doorbell. Common applications of solenoids are to power a switch, like the starter in an automobile, or a valve, such as in a sprinkler system.

- Working Voltage - 5 VDC
- Working Current - 0.63 A
- Stroke - 10 mm
- Holding Force - 0.3 N

Fig.4 Solenoid

Motor Drive L298N

The L298N is a dual H-Bridge motor driver which allows speed and direction control of two DC motors at the same time. The module can drive DC motors that have voltages between 5 and 35V, with a peak current up to 2A. The module has two screw terminal blocks for the motor A and B, and another screw terminal block for the Ground pin, the VCC for motor and a 5V pin which can either be an input or output. This depends on the voltage used at the motors VCC. The module has an on board 5V regulator which is either enabled or disabled using a jumper. If the motor supply voltage is up to 12V we can enable the 5V regulator and the 5V pin can be used as output, for example for powering our Arduino board. But if the motor voltage is greater than 12V we must disconnect the jumper because those voltages will cause damage to the on board 5V regulator. In this case the 5V pin will be used as input as we need connect it to a 5V power supplies in order the IC to work properly.

- Drive voltage: 5-35V
- Logic voltage: 5V
- 25W rated power
- PCB size: 4.2 x 4.2 cm

Fig.5 Motor Drive L298N

Jumper Wires

A jump wire (also known as jumper wire, or jumper) is an electrical wire, or group of them in a cable, with a connector or pin at each end (or sometimes without them – simply "tinned"), which is normally used to interconnect the components of a breadboard or other prototype or test circuit, internally or with other equipment or components, without soldering. Individual jump wires are fitted by inserting their "end connectors" into the slots provided in a breadboard, the header connector of a circuit board, or a piece of test equipment. It includes the following types:

- Solid tips
- Crocodile clips
- Banana Connectors
- Registered Jack
- RCA Connectors
- RF Connectors

Fig.6 Jumper wires

ISSN (Online) 2394-2320

International Journal of Engineering Research in Computer Science and Engineering (IJERCSE)
Vol 6, Issue 7, July 2019

IV. DESIGN IMPLEMENATION

Software Used Fritzing

Fritzing is an initiative that makes electronics accessible as a creative material for anyone. It offers a software tool, a community website and services in the spirit of Processing and Arduino, fostering a creative ecosystem that allows users to document their prototypes and share them with others,teaching electronics in classes, and layout and manufacture professional PCBs.

The software is created in the spirit of the Processing programming language and the Arduino micro-controller and allows a designer, artist, researcher, or hobbyist to document their Arduino based prototype and create a PCB layout for manufacturing. The associated website helps users share and discuss drafts and experiences as well as to reduce manufacturing costs.

Arduino IDE

The Arduino integrated development environment (IDE) is a cross-platform application (for Windows, Mac OS, Linux) that is written in the programming language Java. It is used to write and upload programs to Arduino board.

The source code for the IDE is released under the GNU General Public License, version 2. The Arduino IDE supports the languages C and C++ using special rules of code structuring. The Arduino IDE supplies a software library from the Wiring project, which provides many common input and output procedures. User-written code only requires two basic functions, for starting the sketch and the main program loop, that are compiled and linked with a program stub main ( ) into an executable cyclic executive program with the GNU tool chain, also included with the IDE distribution. The Arduino IDE employs the program avrdude to convert the executable code into a text file in hexadecimal encoding that is loaded into the Arduino board by a loader program in the board's firmware.

Circuit Connection

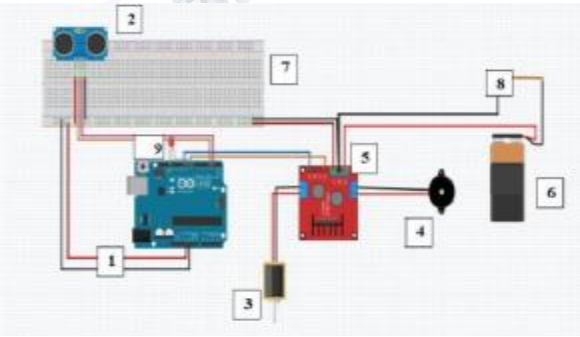

Fig.7 Circuit Connection using Fritzing

1- Arduino UNO
2- Ultrasonic Sensor
3- Solenoid
4- Buzzer
5- Motor Drive L298N
6- 12 V Battery
7- Bread Board
8- Switch
9- LED

Assembly

The connections are made suitably based upon the circuit diagram. Proper wire with adequate lengths and type, say male or female are chosen depending upon the position and nature of ports. The Board is fixed rigidly and safely in suitable Arduino case.

The wires are properly soldered at required areas to ensure its circuit completion. Proper insulation is provided to reduce the occurrence of short-circuiting problems. The freely moving components are fixed to the wooden board using glue gun. Now the circuit is checked for its completion by switching on the battery and verifying using multimeter for current passage at different junctions in the circuit. Now the USB cable is inserted at the USB port for the coupling of Arduino with the PC for inputting the necessary code.

Program const int pingPin = 7; // Trigger Pin of Ultrasonic Sensor const int echoPin = 6; // Echo Pin of Ultrasonic Sensor void setup() {
Serial.begin(9600); // Starting Serial Terminal pinMode(8,OUTPUT);
pinMode(9,OUTPUT); pinMode(10,OUTPUT);
} void loop() { digitalWrite(8,HIGH);
digitalWrite(9,LOW);
digitalWrite(10,LOW);
long duration, inches, cm; pinMode(pingPin, OUTPUT); pinMode(pingPin, OUTPUT); pinMode(pingPin, OUTPUT); digitalWrite(pingPin, LOW); delayMicroseconds(2); digitalWrite(pingPin, HIGH); delayMicroseconds(10); digitalWrite(pingPin, LOW); pinMode(echoPin, INPUT); duration = pulseIn(echoPin, HIGH); inches = microsecondsToInches(duration);
cm = microsecondsToCentimeters(duration);
Serial.print(inches);
Serial.print("in, ");
Serial.print(cm);
Serial.print("cm"); Serial.println(); if(cm<50){ digitalWrite(8,LOW); digitalWrite(9,HIGH);
digitalWrite(10,HIGH); delay(1000); } delay(100); }
long microsecondsToInches(long microseconds) {
return microseconds / 74 / 2;
}
long microsecondsToCentimeters(long microseconds) {
return microseconds / 29 / 2;
}

ISSN (Online) 2394-2320

International Journal of Engineering Research in Computer Science and Engineering (IJERCSE)
Vol 6, Issue 7, July 2019

Code Implementation

• The program is entered in the Arduino IDE software by creating a new file.

• Then the program is compiled for any bugs or error. It is done by pressing CTRL+R or simply compile option from the Sketch menu.

• If any errors rectify it and again compile. There would be "done compiling" message if no errors.

• Select the Arduino UNO Board from the board manager.

• Now upload the coding to the kit.

Fig.8 IDE Upload process

Practical Implementation

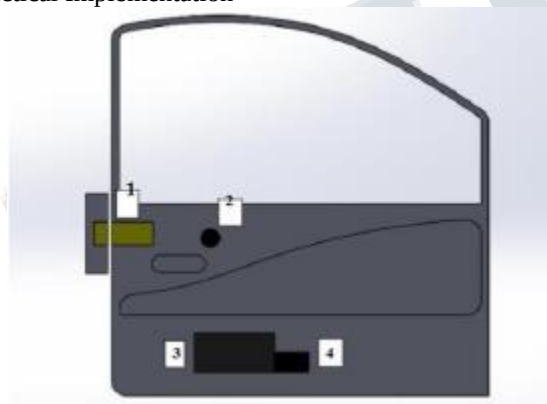

Fig.9 Car door with auxiliary lock

1- Solenoid 3- Circuit Box 2- Buzzer 4- Batter

 The setup can be installed as an auxiliary lock in a vehicle door.

 The wire connections are made internally inside the door as per the circuit diagram with proper insulation and protections.

 The Safety locking mechanism is energized separately using a 12V battery.

 The buzzer and LED Display are installed at a suitable position inside the car where the driver can be easily alerted.The bypass button is installed at a suitable ergonomic position for easier reach by the passenger or driver.

 This button can be used in case of emergency during an approach or in the event of circuit failure or in the event of Traffic

 There is also a possibility of connecting the Circuit with the ECU of the vehicle by activating the setup only when the engine is turned on.This would reduce the lock engaging during parking and wastage of battery voltage.

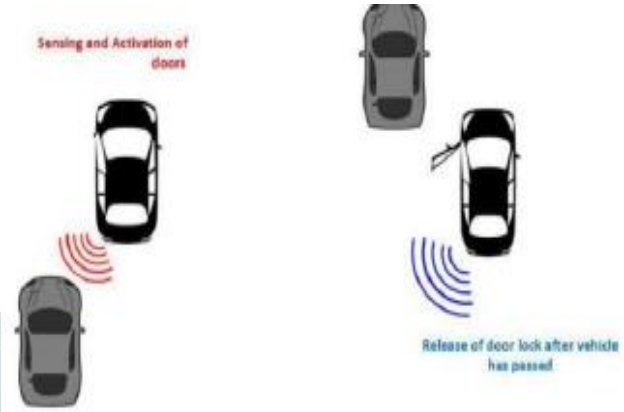

Fig.10 Visual representation of working conditions

V. ASSEMBLED VIEW

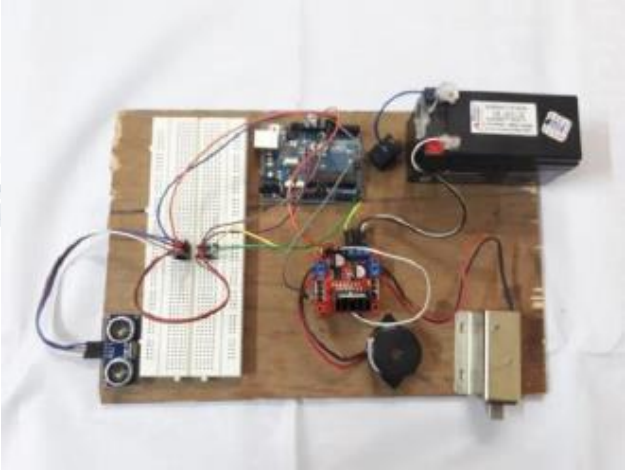

Fig.11 Assembled Circuit

ISSN (Online) 2394-2320

International Journal of Engineering Research in Computer Science and Engineering (IJERCSE)
Vol 6, Issue 7, July 2019

VI. BILL OF MATERIALS

S.NO	PARTS	QTY	PRICE (INR)
1	Arduino UNO kit	1	415
2	Solderless Bread Board	1	68
3	Jumper Cables	22	198
4	LED	1	1
5	Buzzer	1	22
6	Motor Drive L298N	1	76
7	Battery 12 V	1	400
8	Solenoid 12 V	1	850
9	Switch	1	10
10	Resistor	1	1
11	Ultrasonic Sensor	1	110
		Total	1791

VII. CONCLUSION

To conclude this project would have a bright future in the field where automobiles are using more and more electronic enhancements for safety feature. It could be successfully applicable to lorries, trucks and other vehicles where accidents could be prevented most. We believe that a more concentrated research in this field could help produce technologies that could reduce accidents caused by the ignorance of the drivers by 80%. We have been successful in sensing the vehicles and locking the doors. Also, proper intimation will be given to the driver or passenger by using the LED and buzzer. Solenoid delay timings could be altered and varied by simple coding in Arduino. A total implementation of this setup in a vehicle is feasible, easy and cost effective.

As of now our model is using close range sensors to detect the approaching vehicles and pedestrians which could be replaced with high definition cameras. This could lead to implementation of Image Processing Systems controlled by microprocessors. This would result in more precise system for preventing the dooring accidents. Also, the microprocessor could be integrated with ECU of the vehicle for efficient functioning of the system.

VIII. REFERENCES

1. Otte D, Pund B, Jänsch M"A new approach of accident causation analysis by seven steps", ACASS 21st International Technical Conference on the Enhanced Safety of Vehicles (ESV), 2009, Stuttgart, Germany.

2. M. Jänsch, D. Otte, H. Johannsen," Investigation of bicycle accidents involving collisions with the opening door of parking vehicles and demands for a suitable driver assistance system", Journal of Safety Research. 8 (4): 126-139.

3. K.John Abraham ,"Reduce Risk: Be Alert: Doors Are Dangerous". Cambridge Street Code - Rules & Etiquette for Getting There Together (Report). Massachusetts, USA: City of Cambridge.
December 2016. p. 9. Retrieved June 25, 2018

4. The World staff (September 27, 2016). "This easy maneuver, borrowed from the Dutch, could be life-saving for cyclists". The World. Public Radio International. Retrieved July 13,2018.

5. Macmillan, Thomas (August 5, 2013). "Danger: Drivers Dooring Cyclists". New Haven, CT: New Haven Independent. Retrieved June 28, 2018.

6. S. Peter Olsen "7th International Cycling Safety Conference 2018". ICSC 2018. International Cycling Safety Community. October 10, 2018. Retrieved July 10, 2018.

7. Lott, D. F.; Lott, D. L. (1976). "Effect of Bike Lanes on Ten Classes of Bicycle-Automobile Accidents in Davis, California". Journal of Safety Research. 8 (4): 171–179.

8. Brain.W. Evans, Digital I/O, Arduino Programming Notebook

9. Michael McRoberts, Chapter14, Ultrasonic Rangefinders, Beginning Arduino, 2nd edition

10. Alan. G. Smith, Sensors Galore, Introduction to Arduino, 2011
Edition