ISSN (Online) 2394-2320

International Journal of Engineering Research in Computer Science and Engineering (IJERCSE)
Vol 5, Issue 3, March 2018

Implementation and Analysis of Reactive Routing protocol in Mobile Ad hoc Networks

[1] Ranichitra.A, [2] Mallairaj. A
[1] Assistant Professor, Department of Computer Science, Sri S.R.N.M College, Sattur, India,
[2] Junior Programmer, Einzton Technologies, Chennai, India.

Abstract: **- A Mobile Ad hoc network (MANET) is built from a collection of nodes which has the capability to communicate with each other without any infrastructure support. In such a infrastructure less network the mobile nodes are connected wirelessly without any centralized administrator. The routing protocol used for the wired network is not suitable for MANET due its unique characteristics like Dynamic topology, high mobility, Self-Organizing, Self-Healing, Network Scalability, frequent link failure and Multi-hop Communication. This paper presents an architecture for MANET and considers Ad hoc On-Demand Distance Vector (AODV) from reactive routing group for studying the performance of the proposed architecture. This protocol was simulated using NS-2 package and was analyzed in terms of packet delivery ratio, delay, dropped packets and throughput by varying the maximum number of connections for different pause times.**

***Keywords*: MANET, AODV, PDR, Dropped Packets, Throughput, End-to-End Delay.**

I. INTRODUCTION

A mobile ad hoc network (MANET) is a network built from a collection of nodes which has the capability to communicate with each other without any infrastructure support in which the nodes are free to join and leave the network. The nodes are connected with each other through a wireless link. A node in the network can serve as a router to forward the data to the neighbors' nodes and as a mobile node. Therefore this kind of network is also known as infrastructure less networks. These networks have no centralized administration. Each mobile device will move free in any directions independently [1]. MANET is used to exchange the information or files between the two mobile devices without any wired connections. Fig. 1 shows a simple ad-hoc network with 3 nodes. Node 1 and node 3 are not within range of each other; however the node 2 can be used to forward packets between node 1 and node 2. The node 2 will act as a router and these three nodes together form an ad-hoc network [2].

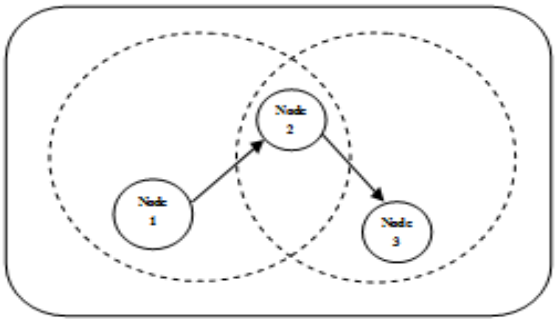

Fig. 1 Mobile Ad hoc Network

The information transmitted by a mobile node will be received by all other nodes within its transmission range due to its wireless connectivity and Omni-directional antenna. Due to the mobility of the node, the network topology may change frequently with time. The network is decentralized, where network organization and message delivery must be executed by the nodes themselves. MANET nodes are typically distinguished by their limited power, processing and memory resources as well as high degree of mobility. In such networks, the wireless nodes may dynamically enter the network as well as leave the network [3]. Due to the limited transmission capability of the nodes in the network, they cannot directly communicate with those which are not in 1-hop neighbours. This weakness is overcome through ad hoc wireless networks. The ad hoc wireless networks or multi-hop communication make use of two or more wireless hops to communicate the information between the source and destination [4].

MANET CHALLENGES

Mobile Ad hoc networks have many features, which make them quite distinct from wired networks and thus require innovative ways to implement the network functionalities. The important characteristics of MANET include autonomous, dynamic topology, device discovery, bandwidth optimization and scalability.

A. Autonomous

Each mobile node is an autonomous node; there is no need to have any centralized authority within the mobile node communication range [5].

International Journal of Engineering Research in Computer Science and Engineering (IJERCSE)
Vol 5, Issue 3, March 2018

B. Dynamic Topology

The mobile nodes are connected dynamically through any arbitrary point. The mobile nodes will move in the dynamic network to establish the connectivity among them [6].

C. Device Discovery

To identify the newly moved nodes and informing about their existence in the dynamic network and the route table is updated to make regular optimal route selection [7].

D. Bandwidth Optimization

The infrastructure less links has significantly lower capacity than the wired links. Routing protocols in wireless networks always use the bandwidth in an optimal manner by keeping the overhead as low as possible. [8].

II. CLASSIFICATION OF ROUTING PROTOCOLS

Routing protocols are used to establish an optimal path to forward the packets in the network. The Ad hoc routing protocols can be categorized as Proactive Routing Protocol, Reactive Routing Protocol, and Hybrid Routing Protocol.

A. Proactive Routing Protocol

In Proactive Routing Protocol, the route table continuously maintains the network topology. The routes to all parts of the network or the destination is determined at starting time and information is stored in different table and these tables are updated when the network topology changes. Examples of proactive routing protocols include Destination Sequenced Distance Vector Routing (DSDV), Wireless Routing Protocol (WRP) [9].

B. Reactive Routing Protocol

In reactive Routing Protocol, to discover a new route the nodes makes use of route request packets and route reply packets, after receiving the route request and route reply messages the route process is approved for transmitting the packets. Examples of reactive routing protocols include Ad hoc On-Demand Distance Vector (AODV), Dynamic Source Routing (DSR) [10].

C. Hybrid Routing Protocol

Hybrid routing protocol is the combination of both proactive and reactive routing protocols. These protocols make use of distance vector as more precise metrics to establish the best paths to destination networks and a node communicates with its neighbors using a proactive routing protocol mechanism. Example of Hybrid routing protocols include Zone Routing Protocol (ZRP) [11].

AD HOC ON-DEMAND DISTANCE VECTOR (AODV)

An Ad Hoc On-Demand Distance Vector (AODV) is a routing protocol mainly designed for wireless and mobile ad hoc networks. The protocol establishes routes to destinations on demand and provides both unicast and multicast routing [12]. In AODV Routing protocol there is a chance of reducing the need for route maintenance and also it will minimize the number of active routes between an active source and destination. It can determine multiple routes between a source and destination. It is difficult to manage multiple routes between same source to destination. So AODV Implements only a single route path. AODV defines 3 message types Route Requests (RREQs), Route Replies (RREPs), Route Errors (RERRs). The RREQ messages are used to initiate the route finding process, the RREP messages are used to finalize the routes and RERR messages are used to notify the network of a link breakage in an active route [13]. Fig. 2, AODV routing protocol with RREQ and RREP messages.

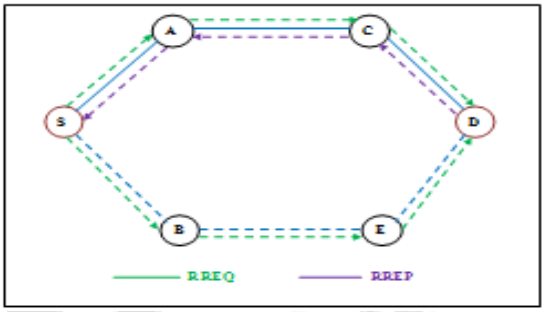

Fig. 2, AODV routing protocol

For route maintenance nodes periodically send HELLO messages to neighbor nodes. If a nose fails to receive three consecutive HELLO messages from a neighbor, it concludes that link to specific node is down. A node that detects a broken link sends a Route Error (RERR) message to any upstream node when a node receives a RERR message it will indicate a new source discovery process [14].

Simulation Result

Table 1
Simulation parameters

Parameter	Value
Simulator	NS2
Simulation Time	150 s
Mobility Model	Random way point
No. of Mobile Nodes	50
Maximum No. of Connection	10, 20, 30, 40, 50
Pause Time	10, 15, 20
Maximum Transmission Rate	0.064
Protocol	AODV
Traffic Model	CBR
Area	1000 x 1000

International Journal of Engineering Research in Computer Science and Engineering (IJERCSE)
Vol 5, Issue 3, March 2018

The performance of the AODV protocol has been evaluated by considering the scenario which consists of 50 mobile nodes. The experiment use mobility nodes by changing the maximum connection as 10, 20, 30, 40 and 50 for maximum pause time of 10, 15 and 20 respectively.

A. Packet Delivery Ratio

Fig. 3 shows the packet delivery ratio for AODV with pause time as 10, 15 and 20 for the different number of connections. From the graph it is clear that the PDR value gradually increases with the increase in number of connection and does not show better results for the number of connections greater than 30.

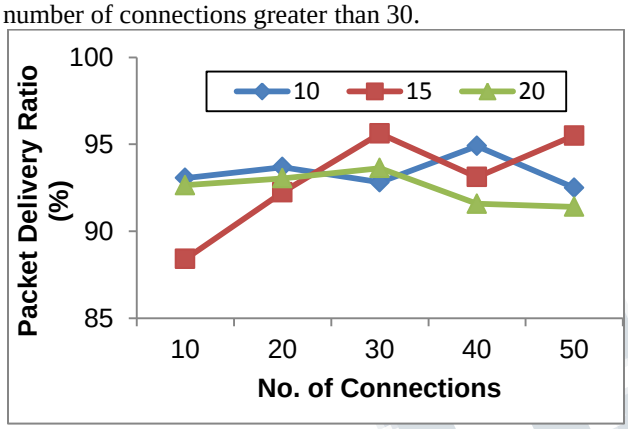

Fig. 3 No. of connections vs PDR(%)

B. Dropped Packets

Fig. 4 shows the dropped packets for AODV with pause time as 10, 15 and 20 for the different number of connections. From the graph it is clear that the dropped packets value gradually decreases with the increase in number of connection and does not show better results for the number of connections greater than 30.

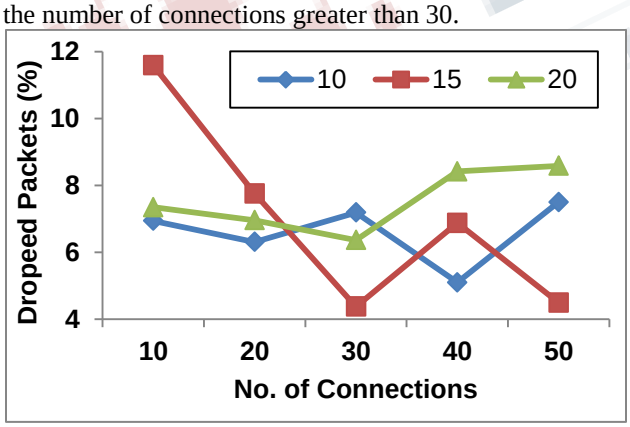

Fig. 4 No. of Connections vs Dropped Packets(%)

C. Throughput

Fig. 5 shows the throughput for AODV with pause time as 10, 15 and 20 for the different number of connections. From the graph it is clear that the throughput value gradually increases with the increase in number of connection and does not show better results for the number of connections less than 30.

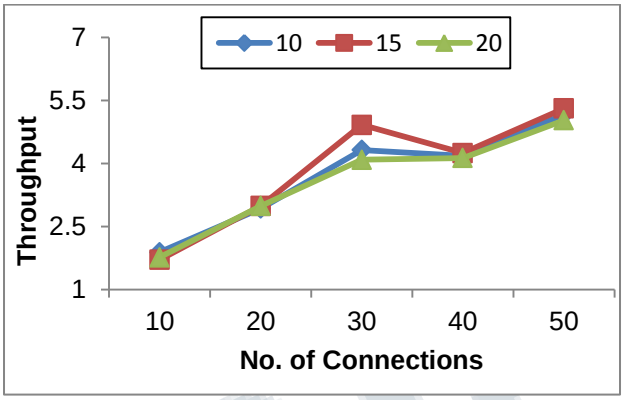

Fig. 5 No. of Connections vs Throughput

Average end to end delay

Fig. 6 shows the Average end to end delay for AODV with pause time as 10, 15 and 20 for the different number of connections. From the graph it is clear that the delay gradually decreases with the increase in number of connection and does not show better results for the number of connections less than 30.

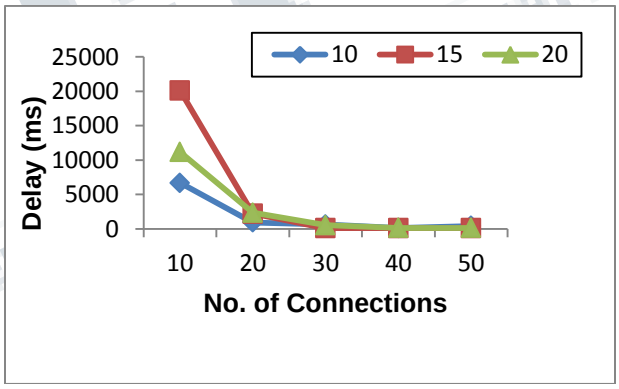

Fig. 6 No. of Connections vs Delay(ms)

III. OBSERVATIONS

From the simulation results it is clear that AODV protocol shows acceptable results in terms of PDR, Dropped packets, throughput and delay with the number of connections as 30 with the pause time as 15 ms.

IV. CONCLUSION

While evaluating the AODV protocol by varying the maximum connection of the mobile nodes for different pause times, results shows 95.62% PDR, 4.38% Dropped packets, 4.25 kbps throughput, 89 ms delay and with the maximum number connections as 30 and pause time as 15.

REFERENCES

[1] Ranichitra, Mallairaj. "IMPACT OF BLACK HOLE ATTACKS IN MANET – A STUDY" International Journal of Innovative Research in Science Engineering Vol. No.3, February 2017 ISSN 2454-9665.

[2] Aarti, Dr. S. S. Tyagi " Study of MANET: Characteristics, Challenges, Application and Security Attacks" International Journal of Advanced Research in Computer Science and Software Engineering 3(5), May - 2013, pp. 252-257.

[3] E. M. Royer and C. K. Toh, "A Review of Current Routing Protocols Ad Hoc Mobile Wireless Networks", IEEE Personal Communications, April 1999, Volume 6, Number 2, pp: 46-55.

[4] Stellar "A SECURE INTRUSION-DETECTION SYSTEM FOR MANETS" International Journal of Computer Networking, Wireless and Mobile Communications (IJCNWMC) ISSN(P): 2250-1568; ISSN(E): 2278-9448 Vol. 5, Issue 2, Apr 2015, 17-24.

[5] Ankur O. Bang 1, Prabhakar L. Ramteke2 MANET : History, Challenges And Applications International Journal of Application or Innovation in Engineering & Management (IJAIEM).

[6] David B. Johnson, David A. Maltz, "Dynamic Source Routing in Ad hoc Wireless Networks", Mobile Computing. (1996) 153-181.

[7] Andreas Tønnesen, "Implementing and extending the Optimized Link State Routing protocol," Master thesis, 2004.

[8] Charles E. Perkins and Elizabeth M. Royer. "Ad hoc On-Demand Distance Vector Routing."

[9] L Raja et al, An Overview of MANET: Applications, Attacks and Challenges International Journal of Computer Science and Mobile Computing, Vol.3 Issue.1, January- 2014, pg. 408-417.

[10] Manveen Singh Chadha, Rambir Joon, Sandeep,Simulation and Comparison of AODV, DSR and AOMDV Routing Protocols in MANETs International Journal of Soft Computing and Engineering (IJSCE) ISSN: 2231-2307, Volume-2, Issue-3, July 2012.

[11] V. Dharman, G. Venkatachalam "Detection of Gray Hole Attack in AODV for MANETs by using Secure Message Digest" South Asian Journal of Engineering and Technology Vol.2, No.17 (2016) 321–329.

[12] Manveen Singh Chadha, Rambir Joon, Sandeep,Simulation and Comparison of AODV, DSR and AOMDV Routing Protocols in MANETs International Journal of Soft Computing and Engineering (IJSCE) ISSN: 2231-2307, Volume-2, Issue-3, July 2012.

[13] X. Wang, T. liang Lin, and J. Wong, "Feature Selection in Intrusion Detection System over Mobile Ad-hoc Network" Technical Report, Computer Science, Iowa State University, 2005.

[14] Sarita Badiwal, VandnaVerma "Survey of IDS in MANET against Black Hole Attack" International Journal of Application or Innovation in Engineering & Management (IJAIEM) ISSN 2319 – 4847 Volume 2, Issue 5, May 2013.